# EC214 Digital Communication lecture -1

Course Instructor Details

Dr.K. Jayanthi
Professor, Dept. of ECE
Pondicherry Engineering College

# Agenda

- Introduction to digital Communication Systems
  - Why digital communication over analog?
  - Information Sources and signals
  - Basic Signal Processing operations
    - Formatting operations

# Analog vs digital Signals

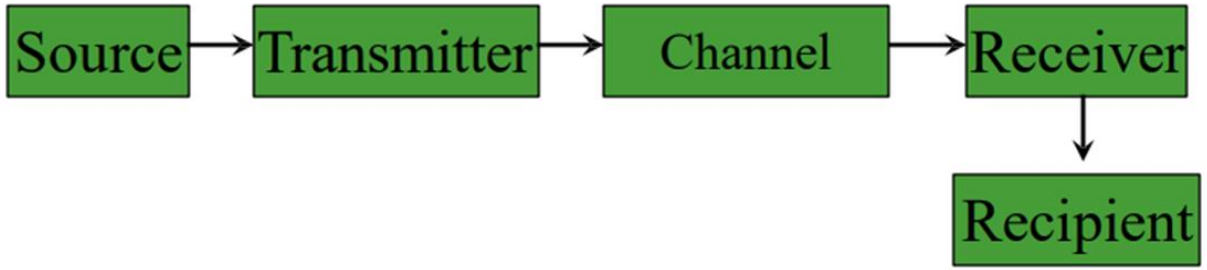


- **Analog signals**
  - Value varies continuously

- **Digital signals**
  - Value limited to a finite set

- **Binary signals**
  - Has at most 2 values
  - Used to represent bit values
  - Bit time $T$ needed to send 1 bit
  - Data rate $R=1/T$ bits per second

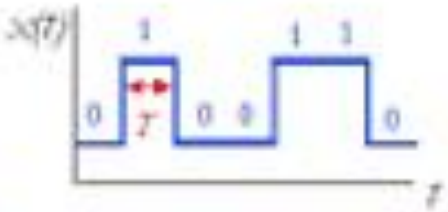

## Example [ periodic square wave ]

No DC component!!!

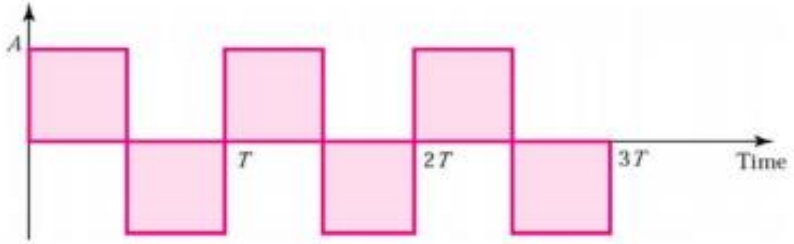


$$s(t) = \frac{4A}{\pi}\sin(2\pi ft) + \frac{4A}{3\pi}\sin(2\pi(3f)t) + \frac{4A}{5\pi}\sin(2\pi(5f)t) + \ldots$$

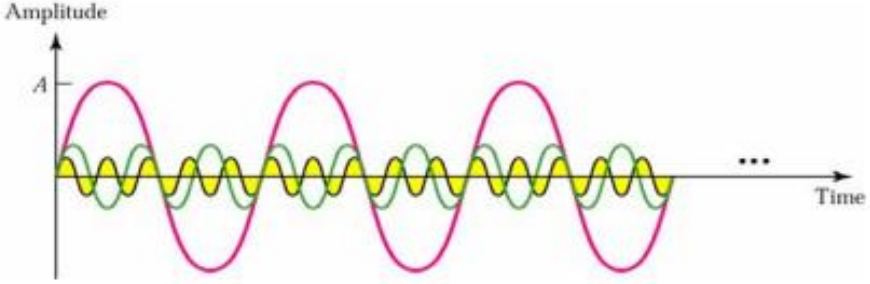


three harmonics

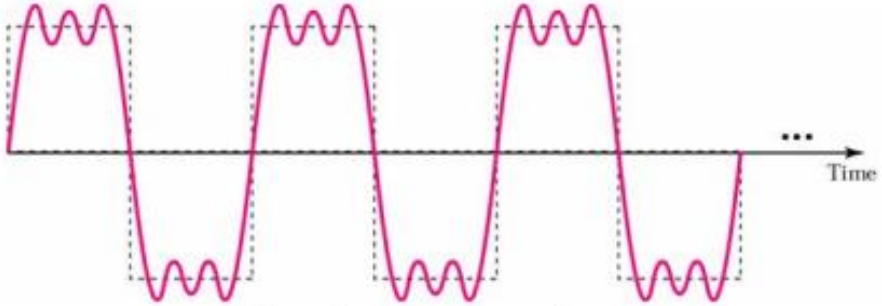


adding three harmonics

**With three harmonics we get an approximation of a square wave.**
**To get the actual square, all harmonics up to ∞ should be added.**

# Spectra of a analog vs digital signal

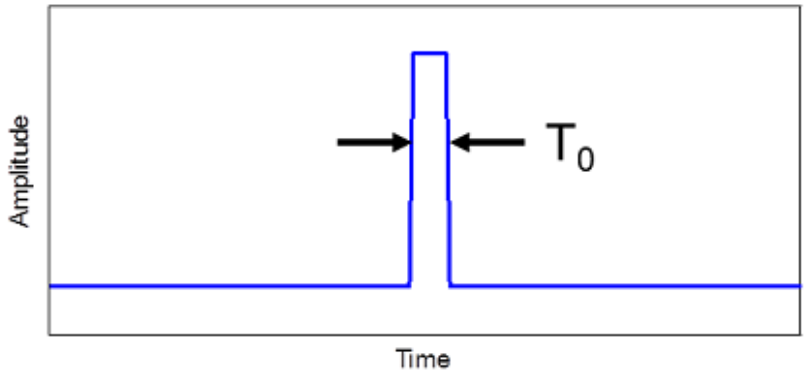


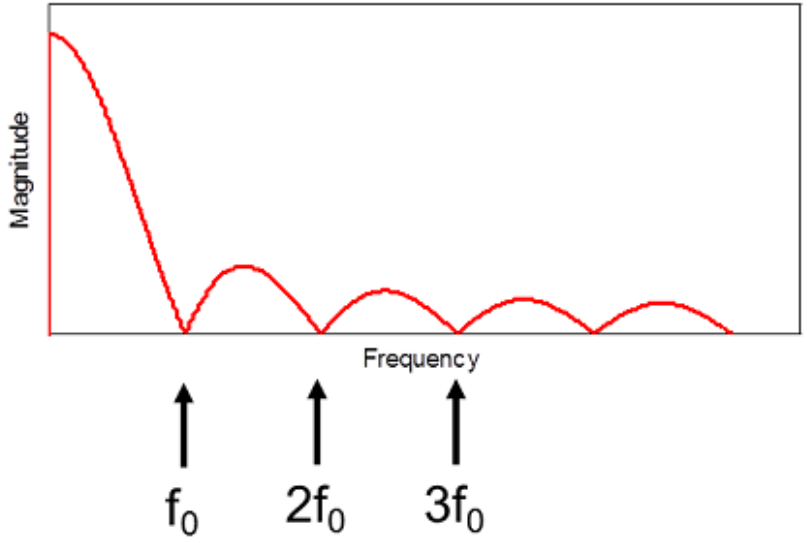


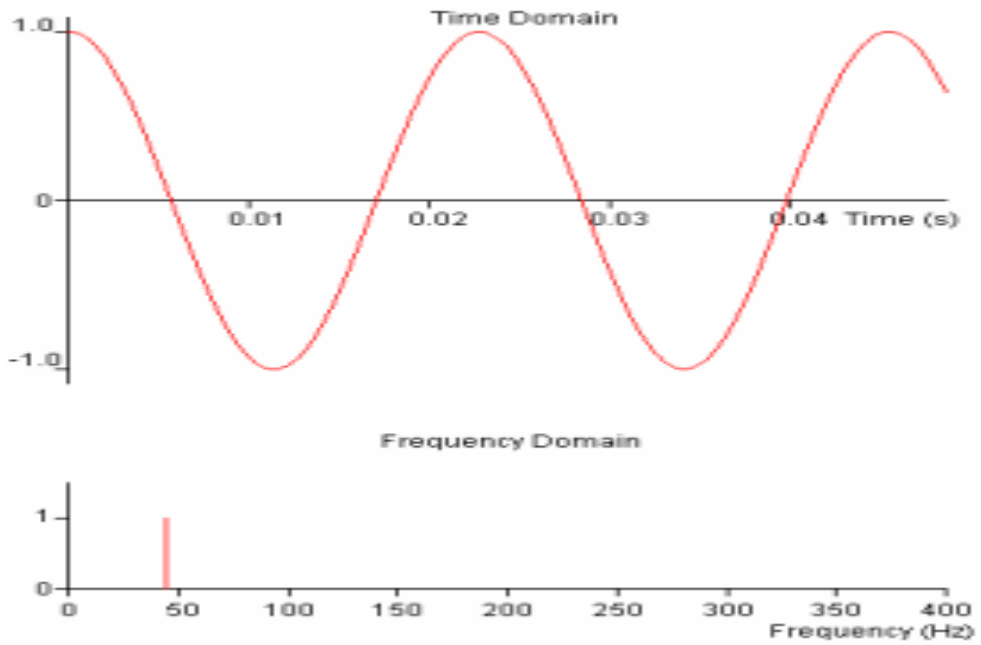


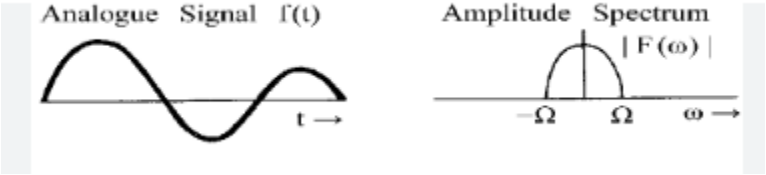


magnitude spectrum is a rectified sinc function, i.e., sinc(x) = sin(x)/x. The spectrum is continuous, which means it requires an infinite number of frequency components to perfectly reproduce.

# Channel effects - Illustration

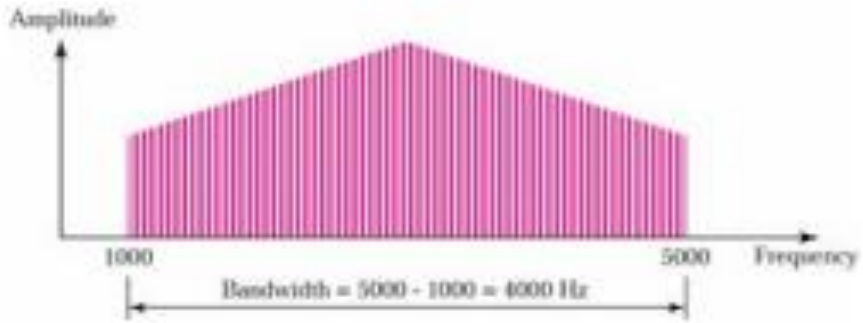


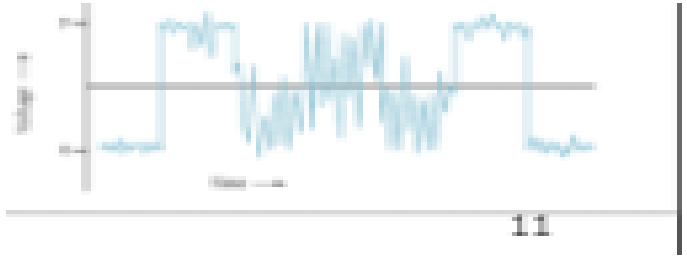

# Channel effects on Analog Vs Digital signal

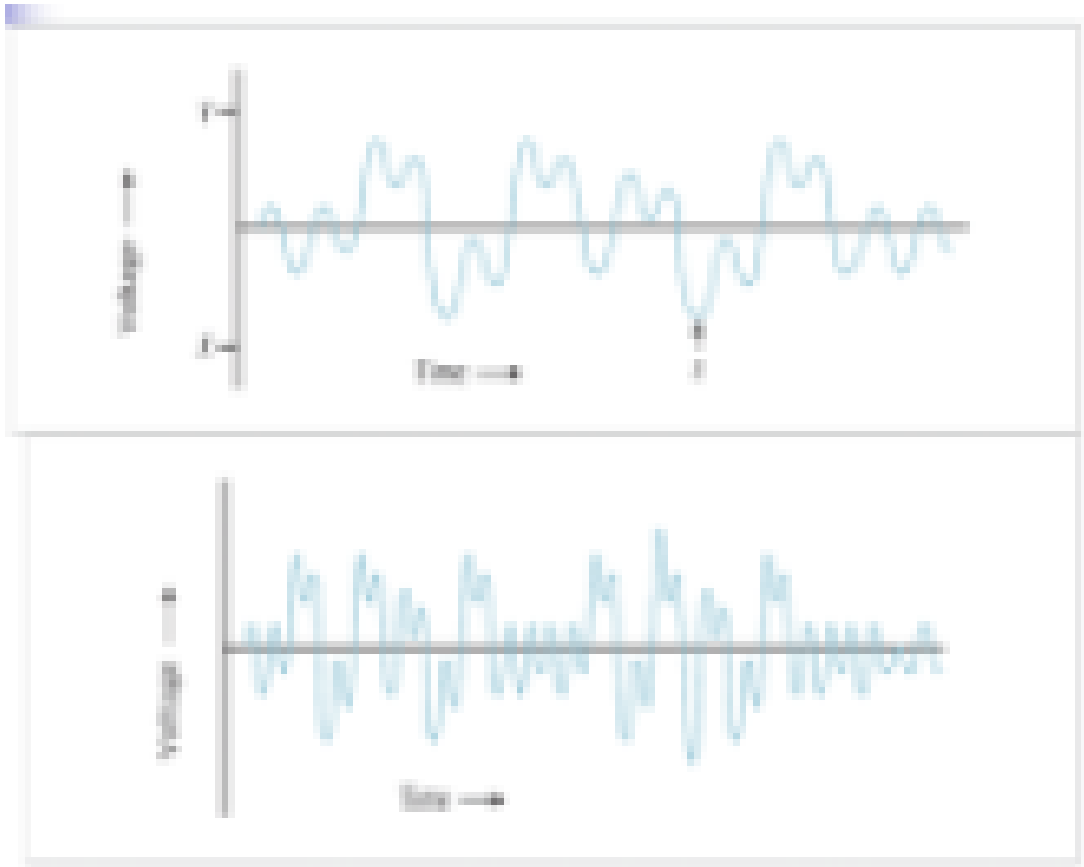

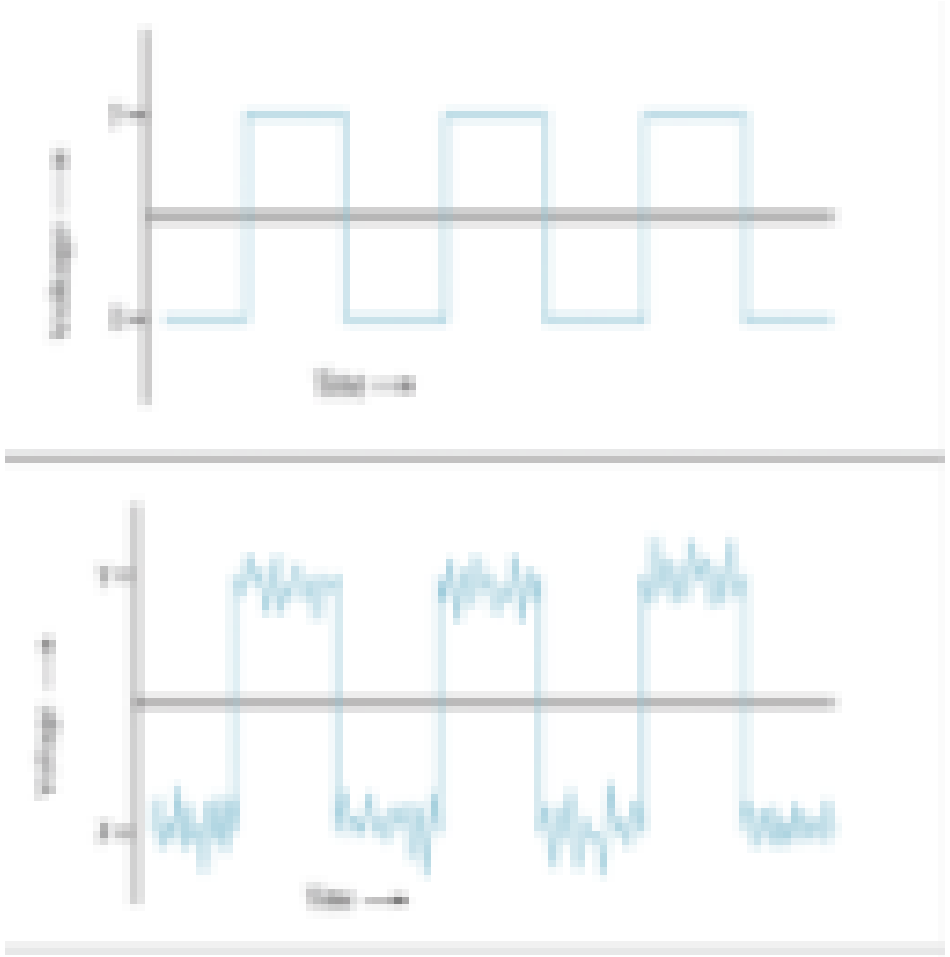

# Why digital ?

- Robustness to channel impairments
  - Digital techniques need to distinguish between discrete symbols allowing regeneration versus amplification.

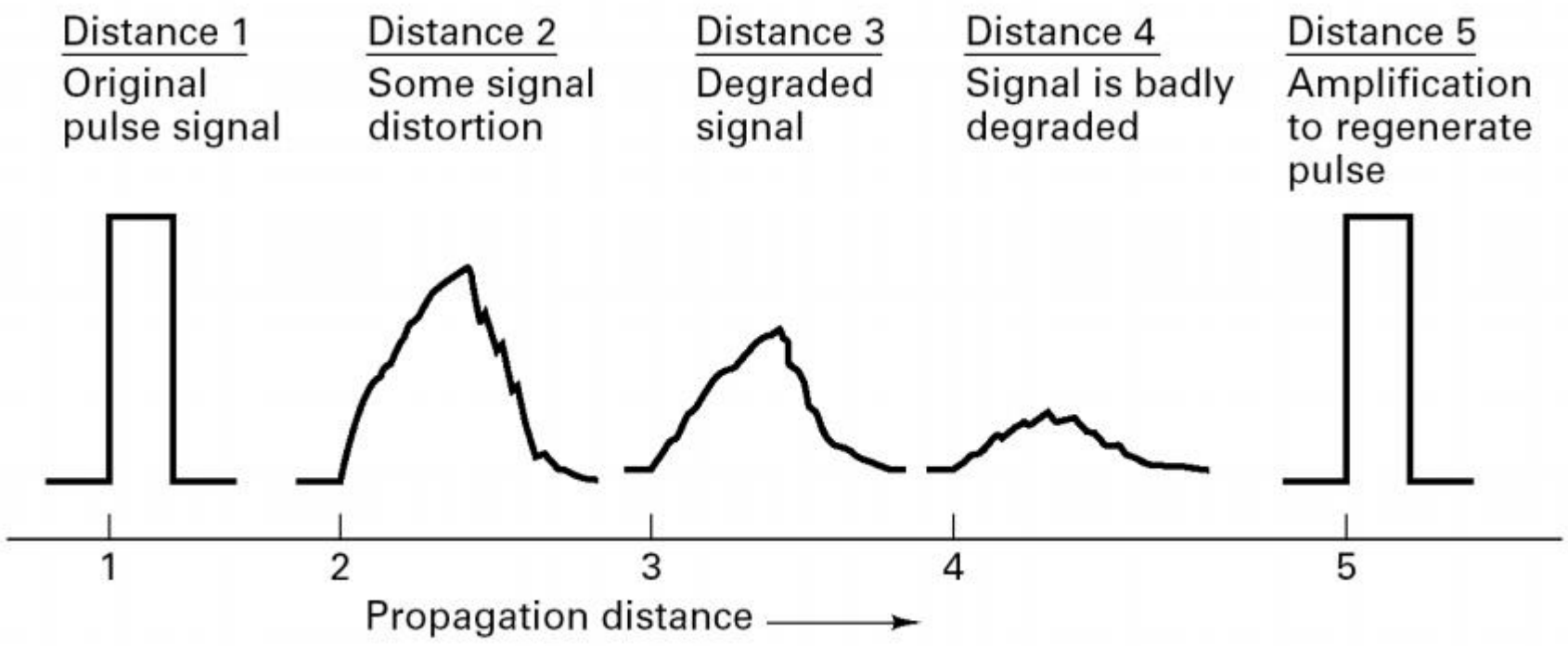


**Figure 1.1** Pulse degradation and regeneration

# Biggest advantage of digital over analog

- Easy to regenerate the distorted signal
- Regenerative repeaters along the transmission path can detect a digital signal and retransmit a new, clean (noise free) signal
- These repeaters prevent accumulation of noise along the path
- This is not possible with analog communication systems – Two-state signal representation

# Why digital ?

- **Good processing techniques are available for digital signals**:

  Data compression (or source coding)

  Error Correction (or channel coding)(A/D conversion)

  Equalization

  Security

- **Easy to mix signals and data using digital techniques**

- **Cost effective digital implementations**
  - Digital hardware implementation is flexible and permits the use of microprocessors, mini-processors, digital switching and VLSI like FPGA/ DSP.

# Disadvantages in Digital comm.

- Requires  relatively a larger bandwidth

- Requires reliable “synchronization”
- Requires A/D conversions at high rate

Requires Complex signal conditioning

# Information sources

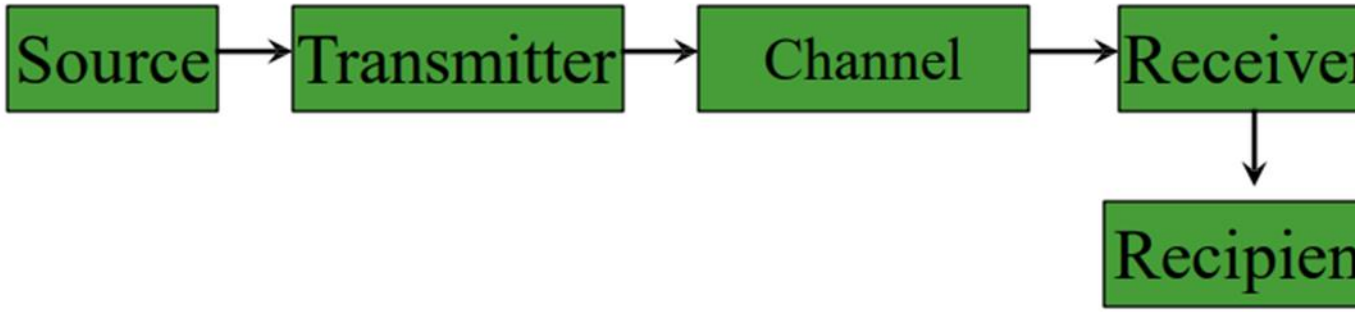


- What are sources?
- Types of Sources:  Analog source and digital source
- Examples of data/information:  Voice, video, text , multimedia
- Why Formatting  step essential?

# Data

- Analog
  - Continuous values within some interval
  - e.g. sound, video
- Digital
  - Discrete values
  - e.g. text, integers

# Possible combinations

- Digital data, digital signal
- Analog data, digital signal
- Digital data, analog signal
- Analog data, analog signal

# Analog Signals Carrying Analog and Digital Data

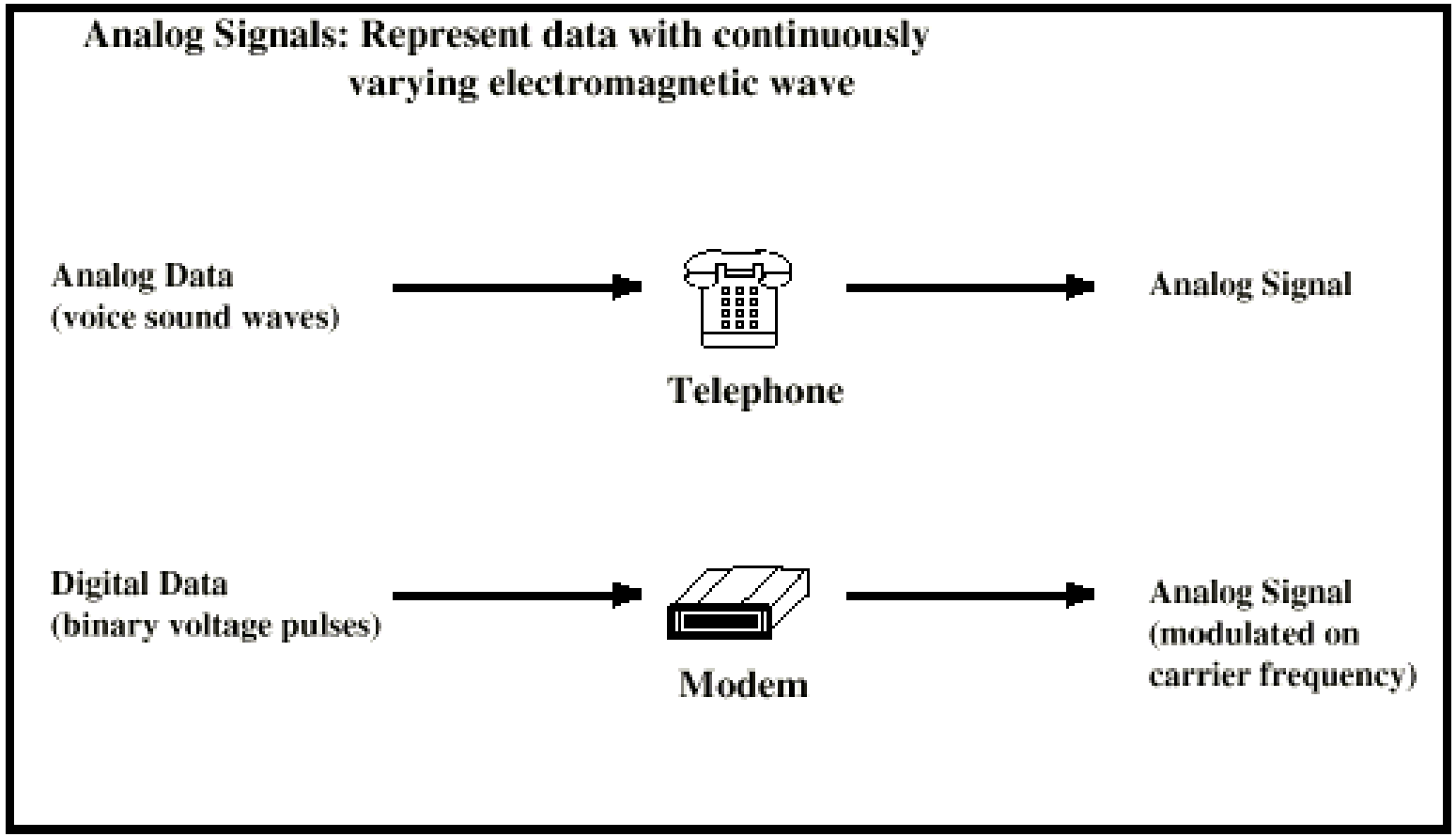

# Digital Signals Carrying Analog and Digital Data

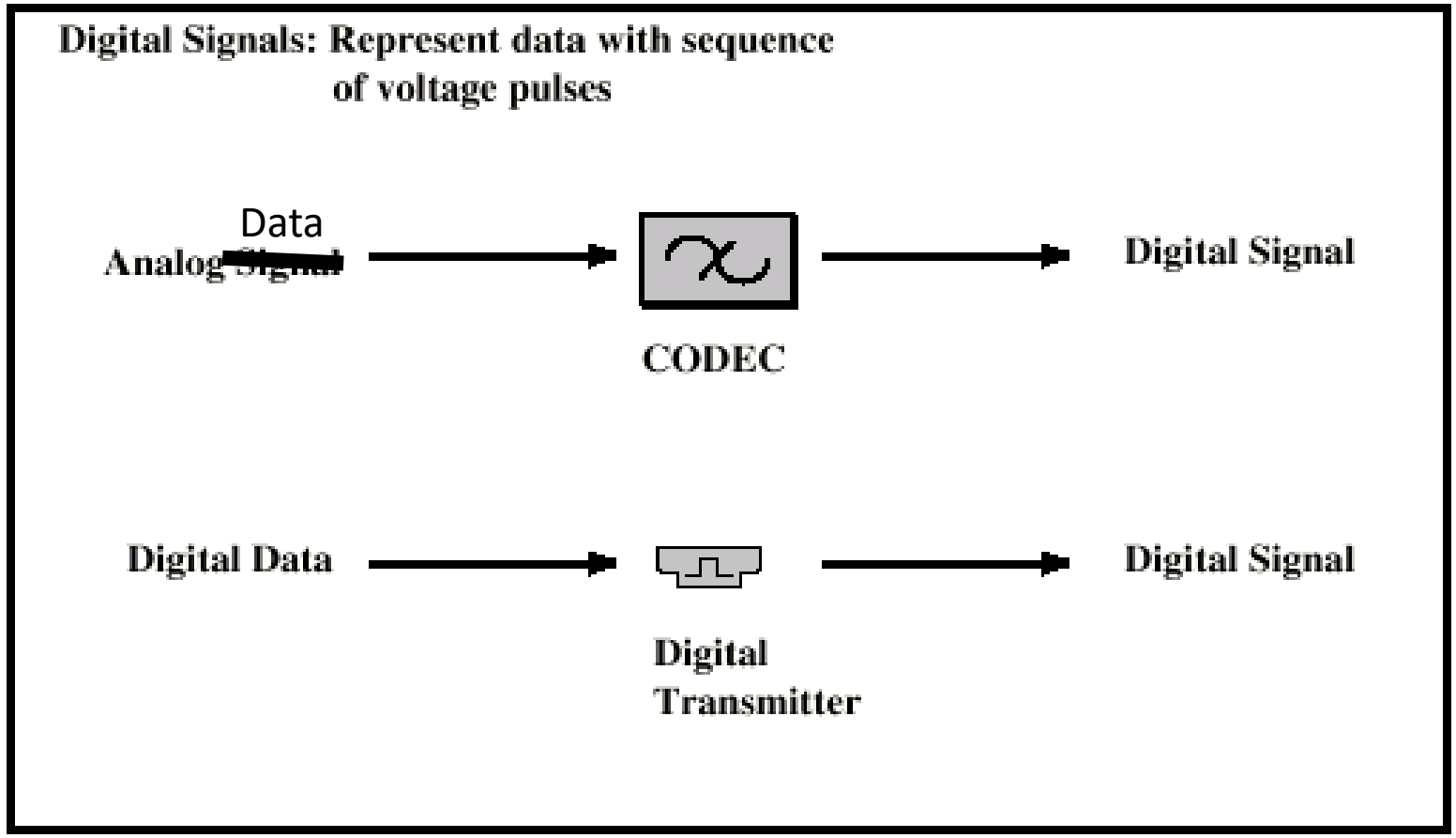

# Formatting

- Why formatting ?

❖ To make the source signal compatible with digital processing.

- The first processing step in digital communication is Formatting: It includes
  - Sampling
  - Quantisation
  - Coding

**Process of Transformation from source info to digital symbols such that the source is compatible with digital processing**

# Waveform representation of binary digits

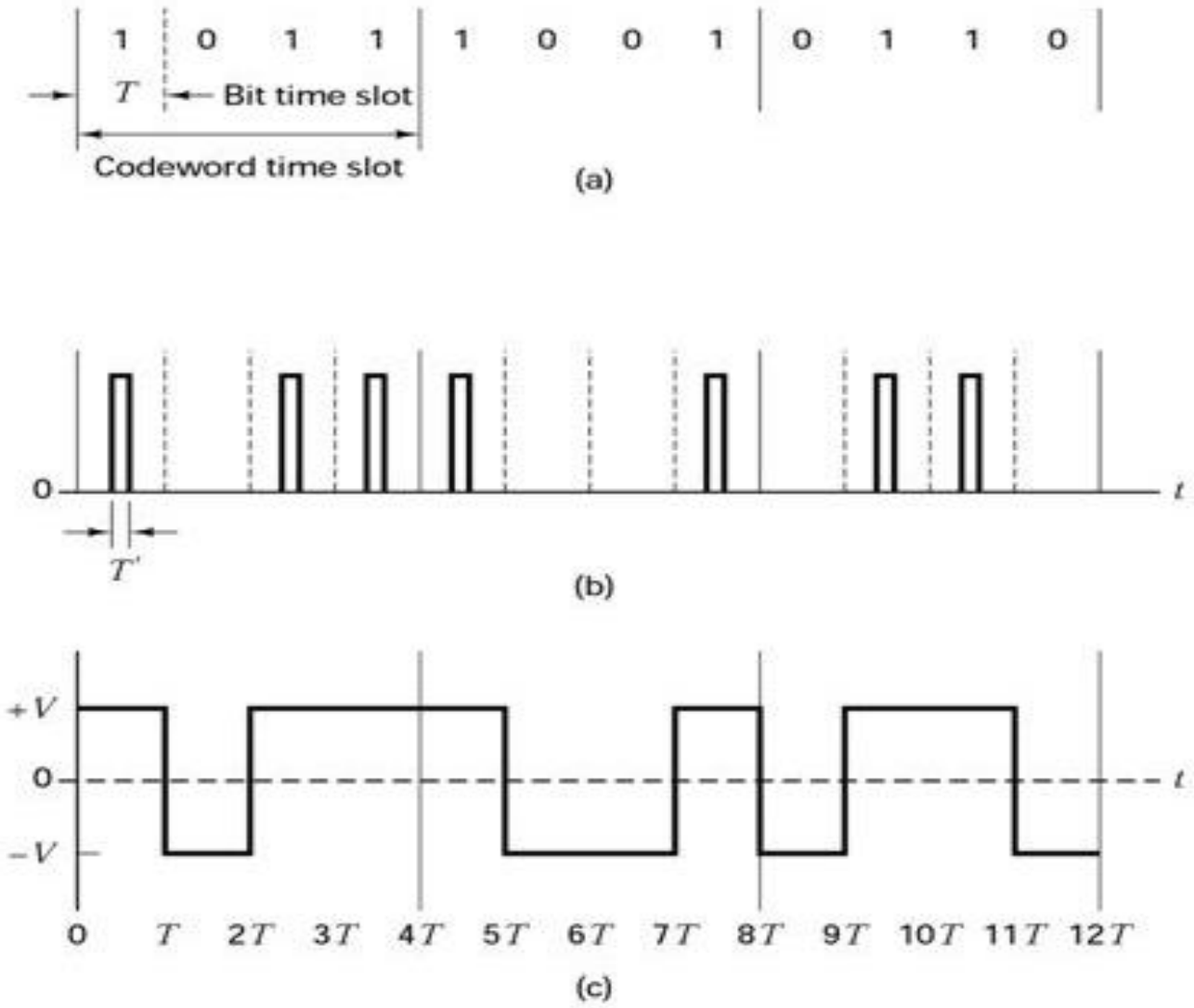

# Points to remember

- Analog data – need the entire formatting process ( sampling, quantisation and encoding)
- Digital data – no formatting needed
  - Eg: textual / alphanumeric character - character coding (eg: ASCII, EBCDIC )
- For digital transmission, the characters are first encoded into a sequence of bits called bit stream.
- Group of bits – symbols , eg: group of k bits can form 1 symbol in the finite set of M .where $M = 2^k$

# Modes of Transmission

- Simplex
  - In only one direction from transmitter to receiver
  - Example: radio
- Half-Duplex
  - Two-way communications but in only one direction at a time
  - Example: walkie-talkie
- Full-Duplex
  - Simultaneous two-way communications
  - Example: videoconferencing

# Serial versus Parallel Transmission

- Serial
  - Transmitting bits one after another along a single path
  - Slow, cost-effective, has relatively few errors, practical for long distances
- Parallel
  - Transmitting a group of bits at a single instant in time, which requires multiple paths.
  - Fast but expensive, practical for short distances

# Basic signal processing
# Formatting - what, why and How?

- What is Formatting?
  - Before the signals are transmitted over a **digital communication** channel, an information bearing signal must be converted to **digital** symbols.
  - **Process of transforming source information into digital symbols**
- Why formatting?

It makes the source signal compatible with digital processing.

- How formatting is achieved?
  - Sampling * Quantisation * Encoding
- What is next to Formatting?
  - Subsequently, the resulting **digital** symbols are then represented by baseband waveforms

# textual / alphanumeric character - character coding

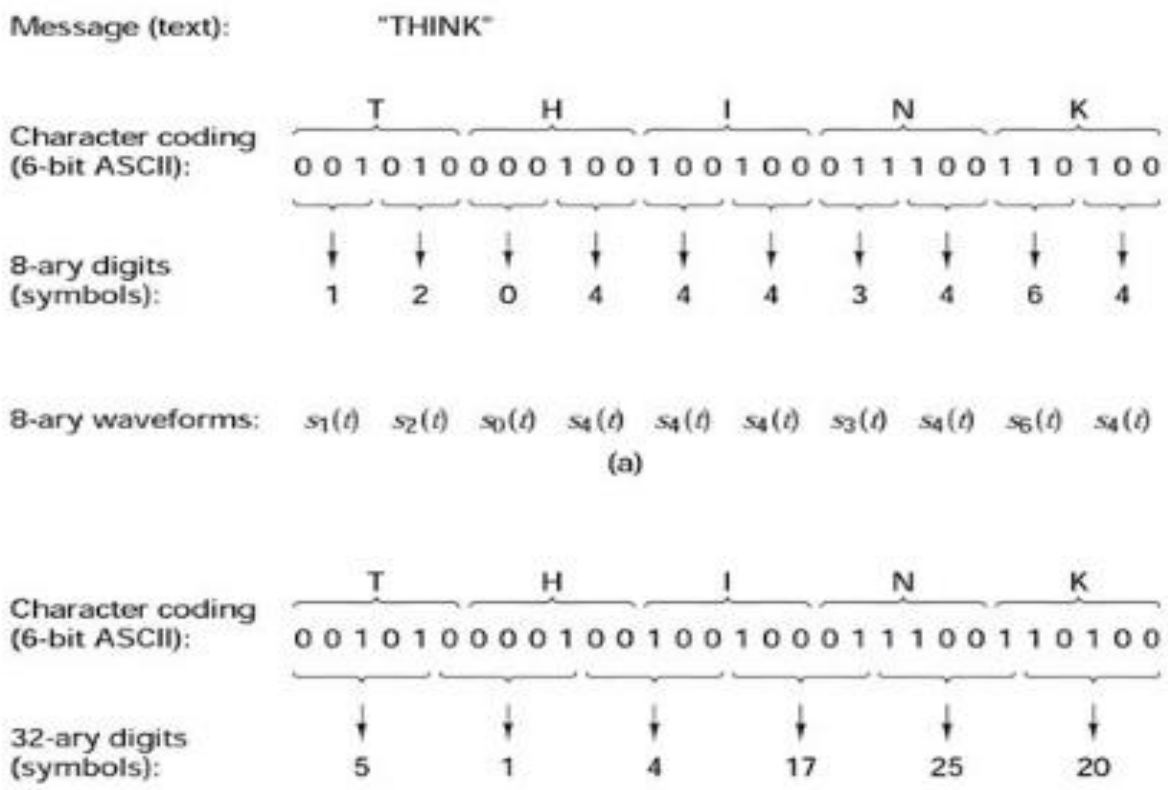

# Concept of Sampling

- Sampling is a fundamental operation that is basic to DSP and digital communication
- Through sampling process, an analog signal is converted into a corresponding sequence of samples that are usually spaced uniformly in time.
- This discretization of analog signal is called as Sampling.

# More illustrations of sampling process – with varying sampling rate

Fig.a

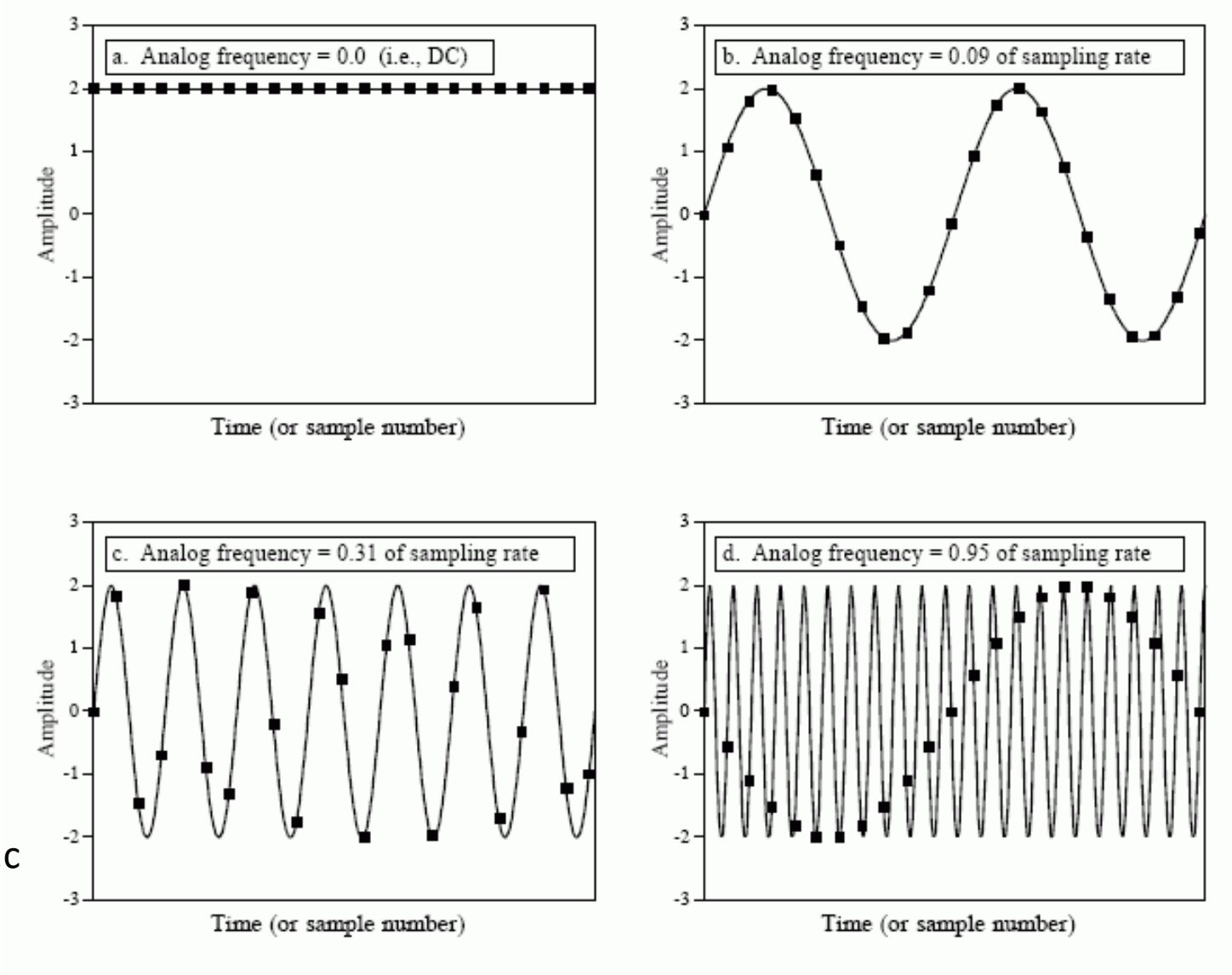


Fig.b

Fig.c

Fig.d

# Significance of sampling

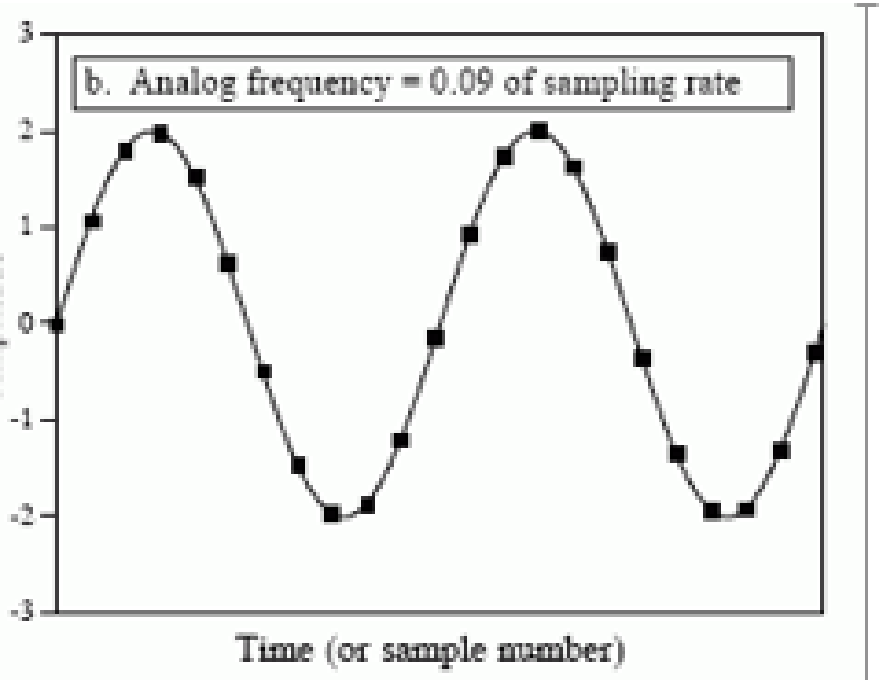


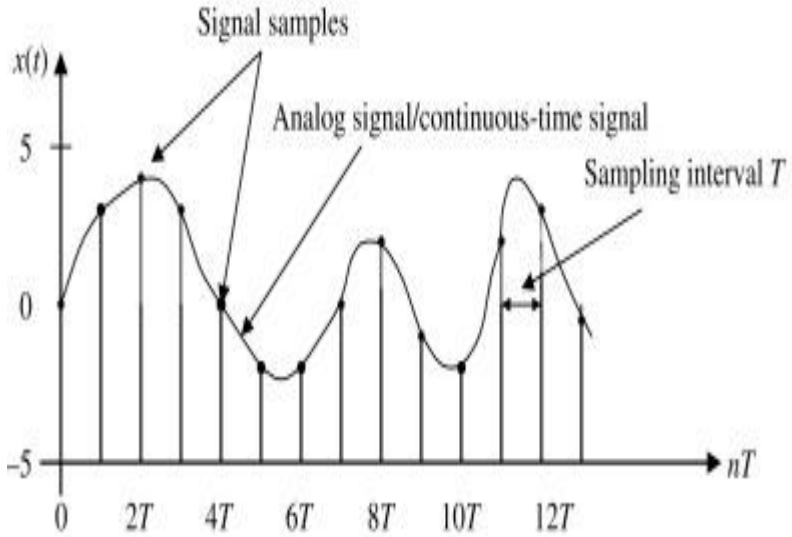


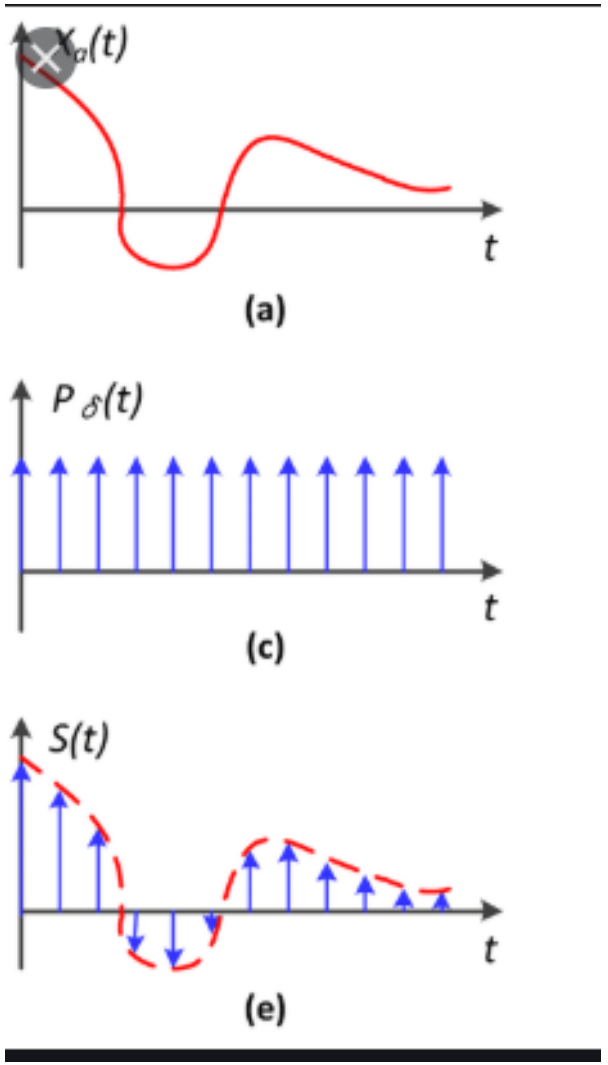

# Ideal sampling

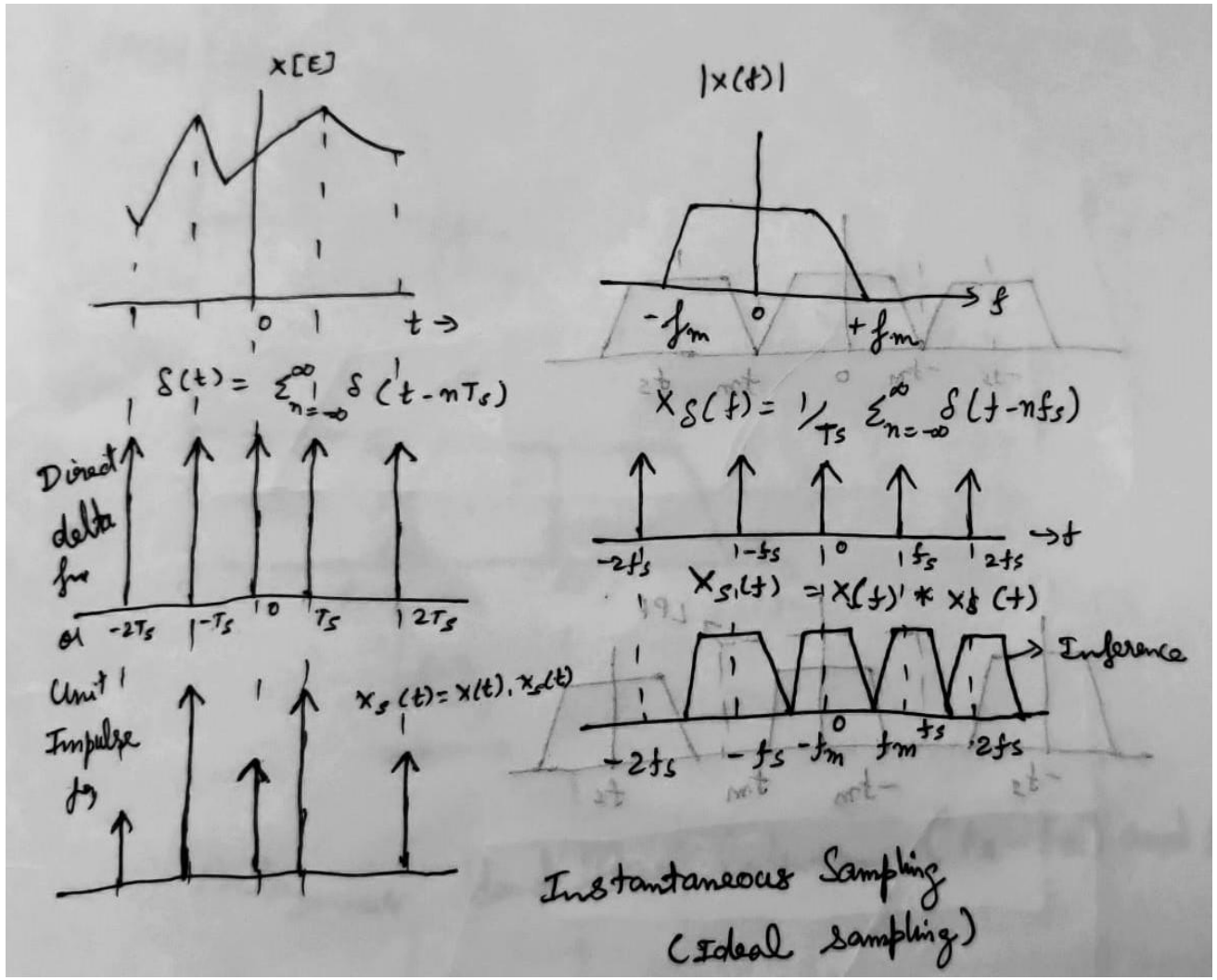


- Consider an arbitrary signal x(t) with finite energy.
- **Sampling function : Delta function.**
- when the signal x(t) is sampled instantaneously at a uniform rate once in every $T_s$ seconds.

- The resultant o/p is a infinite sequence of samples spaced '$T_s$' seconds apart.
- This $T_s$ - sampling period and $1/T_s = f_s$ - sampling rate
- This ideal form of sampling is called instantaneous sampling .

A delta function is an ideal function that has unit area.
This delta function is closely approximately by a rectangular pulse of duration Δt .
Smaller the Δt is, the better will be the approximation.

# Ideal sampling

- Consider a bandlimited signal x(t) and is spectrum X(ω):

- Ideal sampling = multiply x(t) with impulse train :

$\omega_s = 2\pi / T_s$

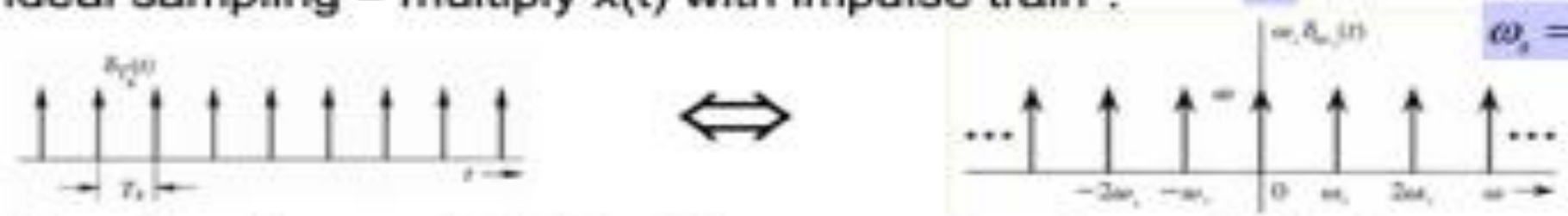

- Therefore the sampled signal has a spectrum (convolution):

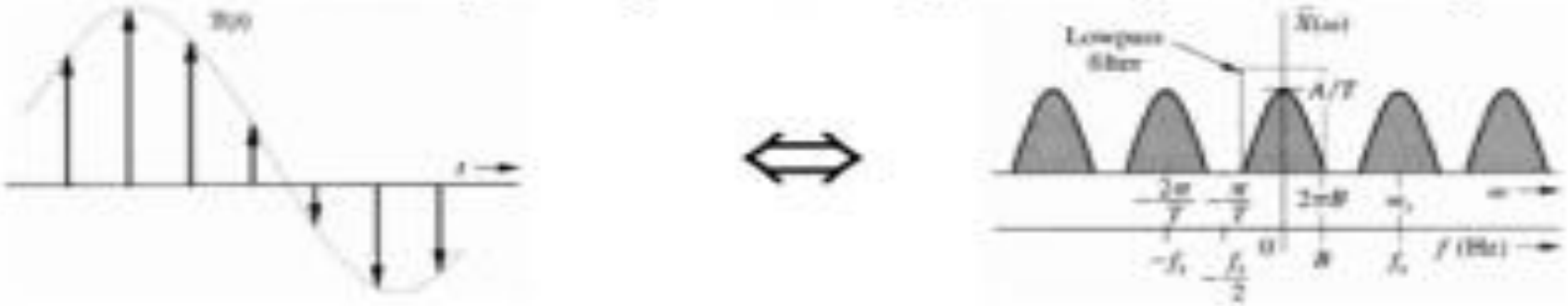

# Inferences from sampled spectrum

- The spectrum of the sampled signal within a constant factor ($1/T_s$) is **exactly the same as the original analog signal**
- The process of signal sampling a continuous time signal of finite energy results **in a periodic spectrum with a period equal to the sampling rate.**
- **Recovery ??**

# Sampling theorem

- A band-limited signal having no spectral component above $f_m$ hertz can be determined uniquely by value sampled at uniform intervals of $T_s$ seconds.

- **$T_s <= 1/2f_m$ (or) $f_s >= 2f_m$**

- The spectrum of the sampled signal within a constant factor ($1/T_s$) is exactly the same as the original analog.

# A practical approach – natural sampling & Flat top sampling

- Although instantaneous/ideal sampling is a convenient model, a more practical way of accomplishing the sampling of a analog signal x(t) is by using a pulse train or a switching waveform $X_p(t)$.
- Each pulse in $x_p(t)$ has a width T and amplitude 1/T.
- This sampling is termed as natural sampling since the top of each pulse in $x_s(t)$ sequence retains the shape of its corresponding analog sequence during the pulse interval. To get flat top samples, Sample and hold circuit is used.

# Flat top sampling

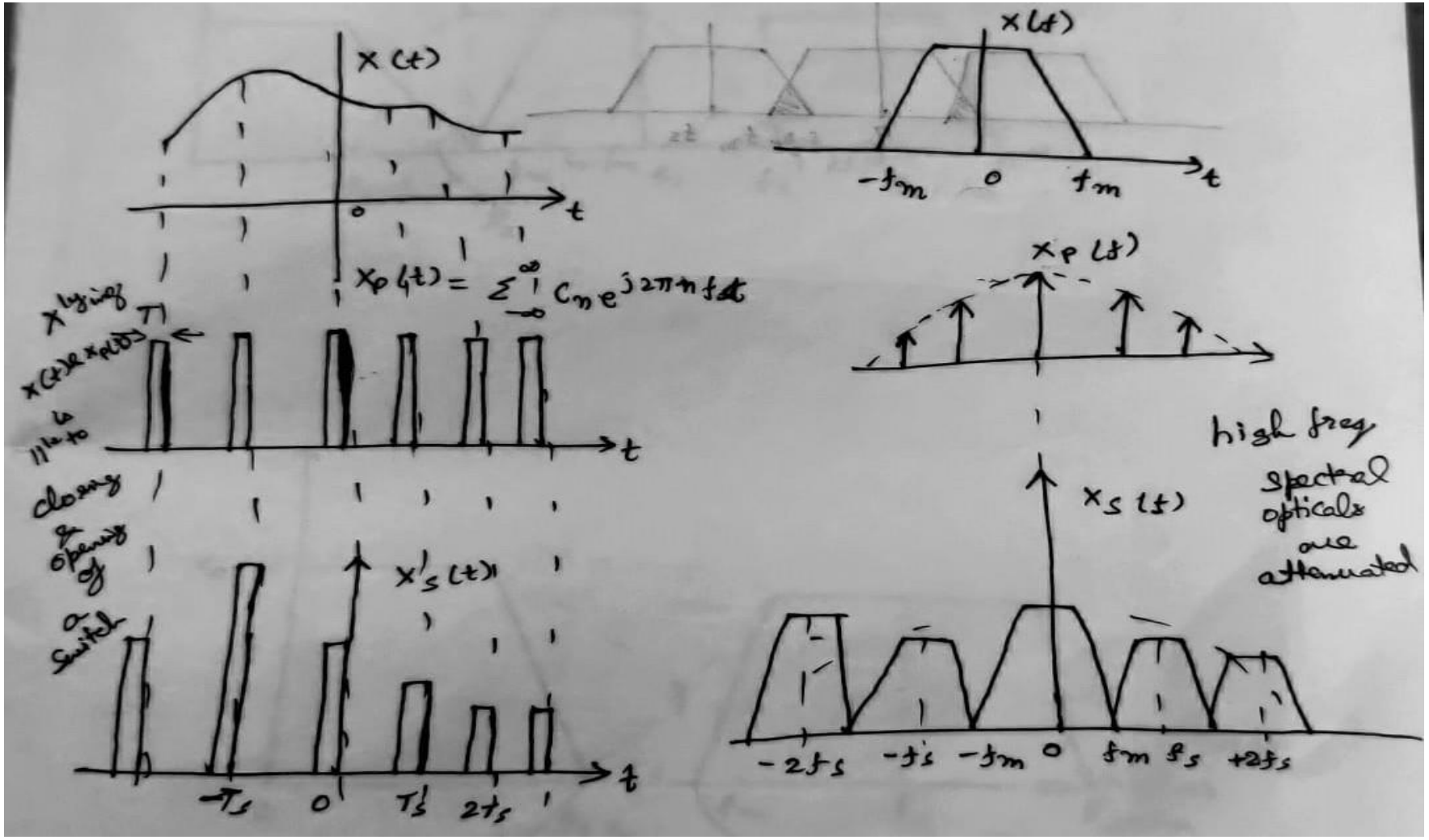


- The output of the sampling process is called PAM because the successive o/p intervals can be described as a sequence of pulses with amplitude derived from the i/p waveform.

# Reconstruction of samples

- Each spectral replicate is separated from each of its neighbour by a frequency band equal to $f_s$ hertz
- The analog waveform can be completely recovered from the sampled output by use of LPF.
- Analysis of different cases.

# CASE 1: when $f_S = 2f_m$

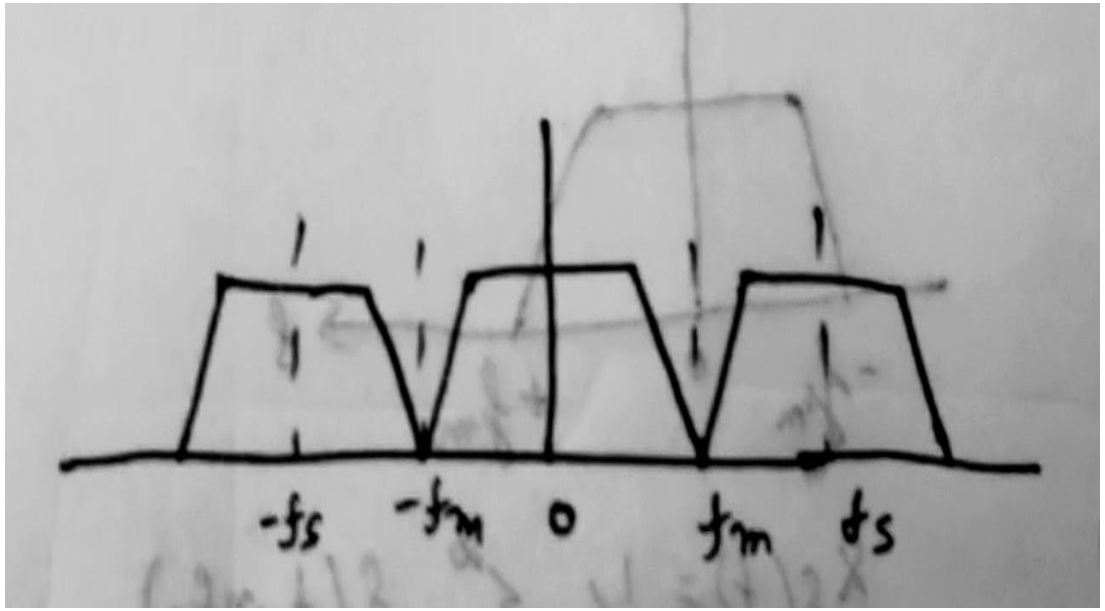


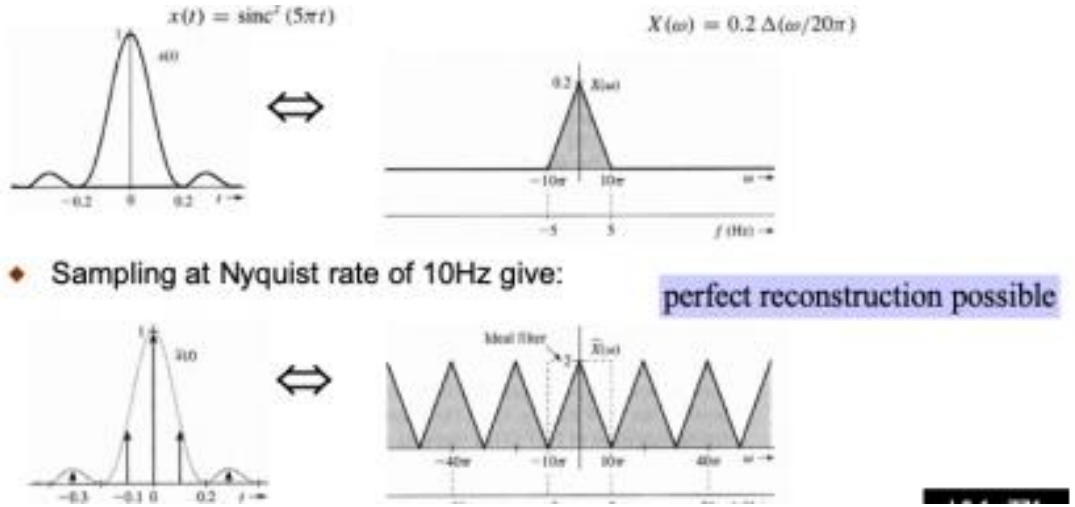


CASE1: when $f_s = 2f_m$ , a filter with infinitely steep sides would be required

# CASE2: when $f_S > 2f_m$

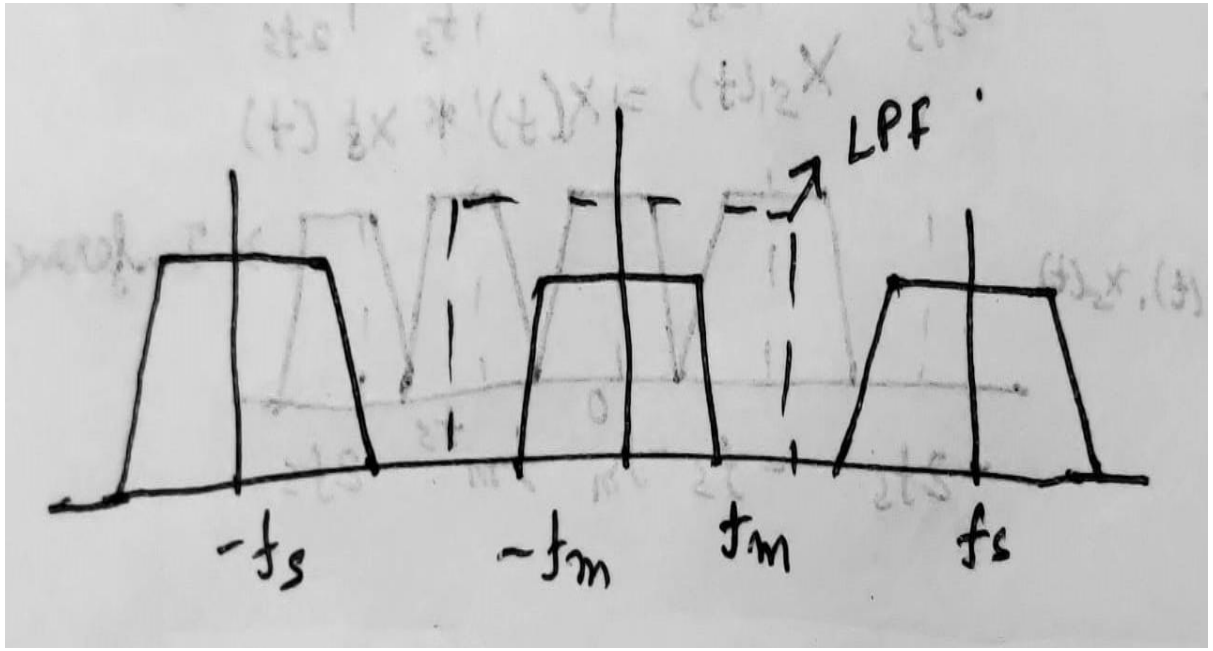


Since the replications are farther apart in frequency and hence the LP filter can be performed easily

# CASE3: when $f_S < 2f_m$

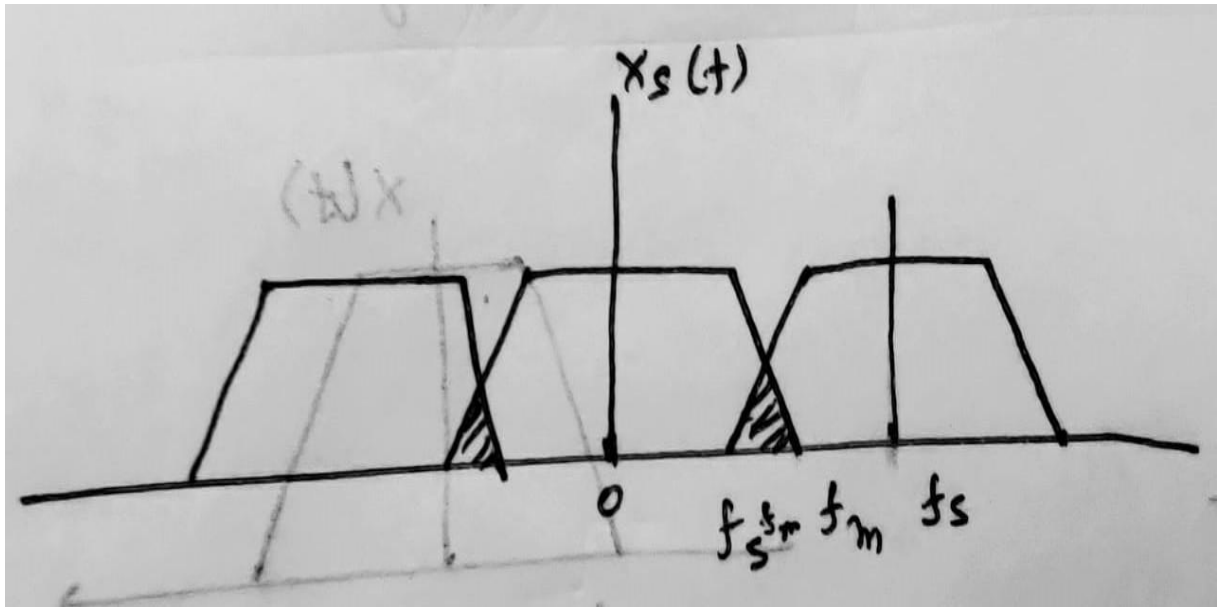


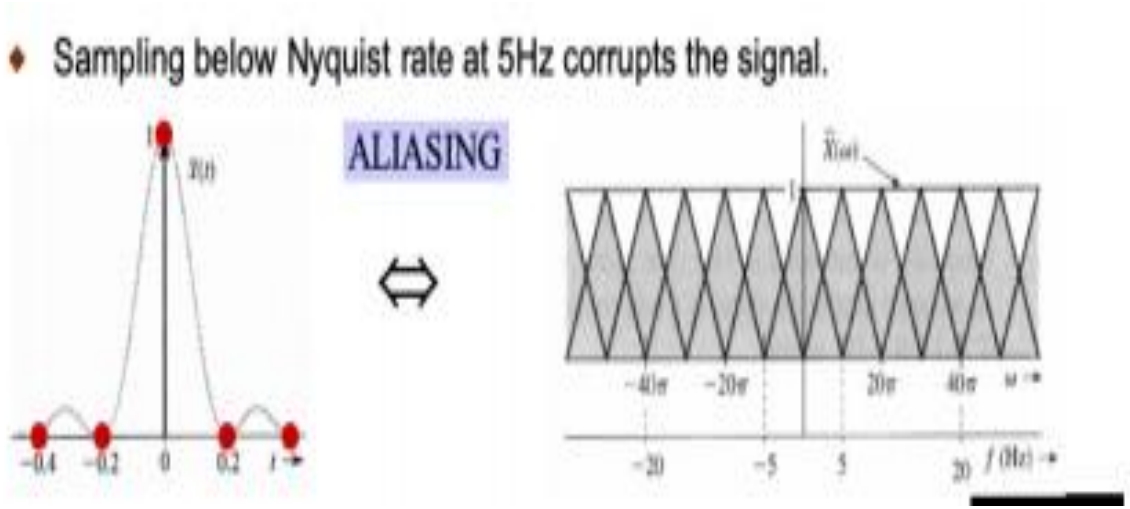


when $f_s < f_m$ , the replications overlap and information is lost the result of under sampling is called aliasing

# Problems encountered in improper choice of sampling frequency ???

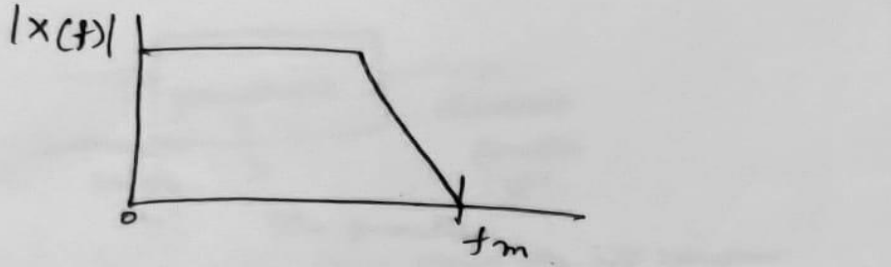


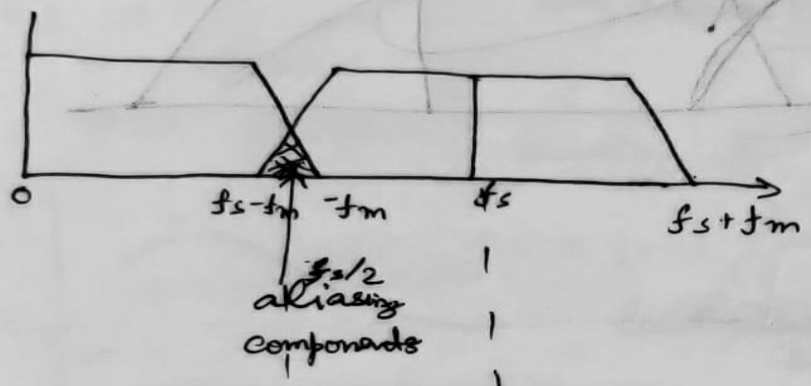


Ambiguous band lies between $(f_s - f_m)$ and $f_m$.

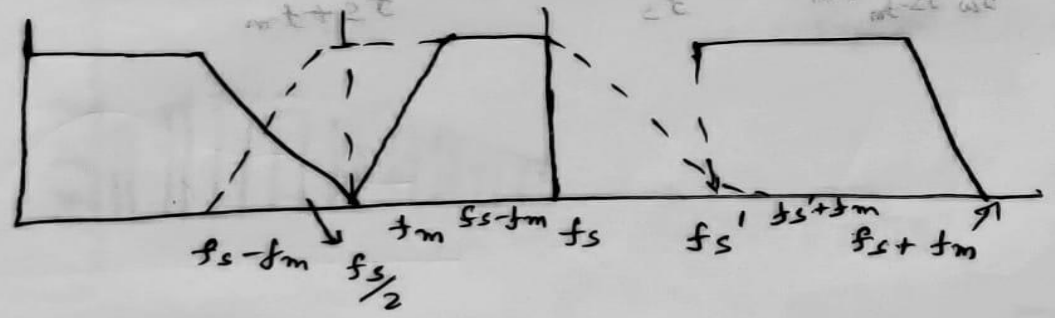

# Aliasing concept

- The Nyquist rate $f_s = 2f_m$ is the sampling rate below which aliasing occurs – **Under Sampling**

Two practical SOLUTIONs:

1) A higher sampling rate $f_s$ can eliminate the aliasing by separating the spectral replicas.

2) Antialiasing filters:

Antialiasing pre-filtering

- The analog signal is pre-filtered so that the new max freq $f_m$ is reduced to $f_s/2$ or less so that the aliasing components are totally eliminated.

# Step: 2  Quantization

# Significance of quantisation?

- The sampled signal is not compatible with a digital system .
- A digital system always deals with finite no .of symbols or amplitude levels.

- How is Quantisation achieved?
  - Quantiser

# Quantisation Process

- The sampled signal has a continuous amplitude range represented by a **infinite number of amplitude levels**.
- What is Quantisation ?
- It is defined as the process of transforming the amplitude ( Continuous range) of a samples into a **discrete amplitudes** taken

**from finite set of possible amplitudes**.

# Quantisation Process

- The quantiser g(.) maps the input random variable M of continuous amplitude into discrete random variable V.

- The mapping v=g(m) is the quantiser characterized which is usually a staircase function.

  - At the quantiser output, input is transformed into a discrete amplitude ‘$V_k$‘ and k refers to representation levels or quantisation levels or reconstruction levels.

Where ‘k’ represents the decision levels / quantisation levels.

# Illustration of Quantisation

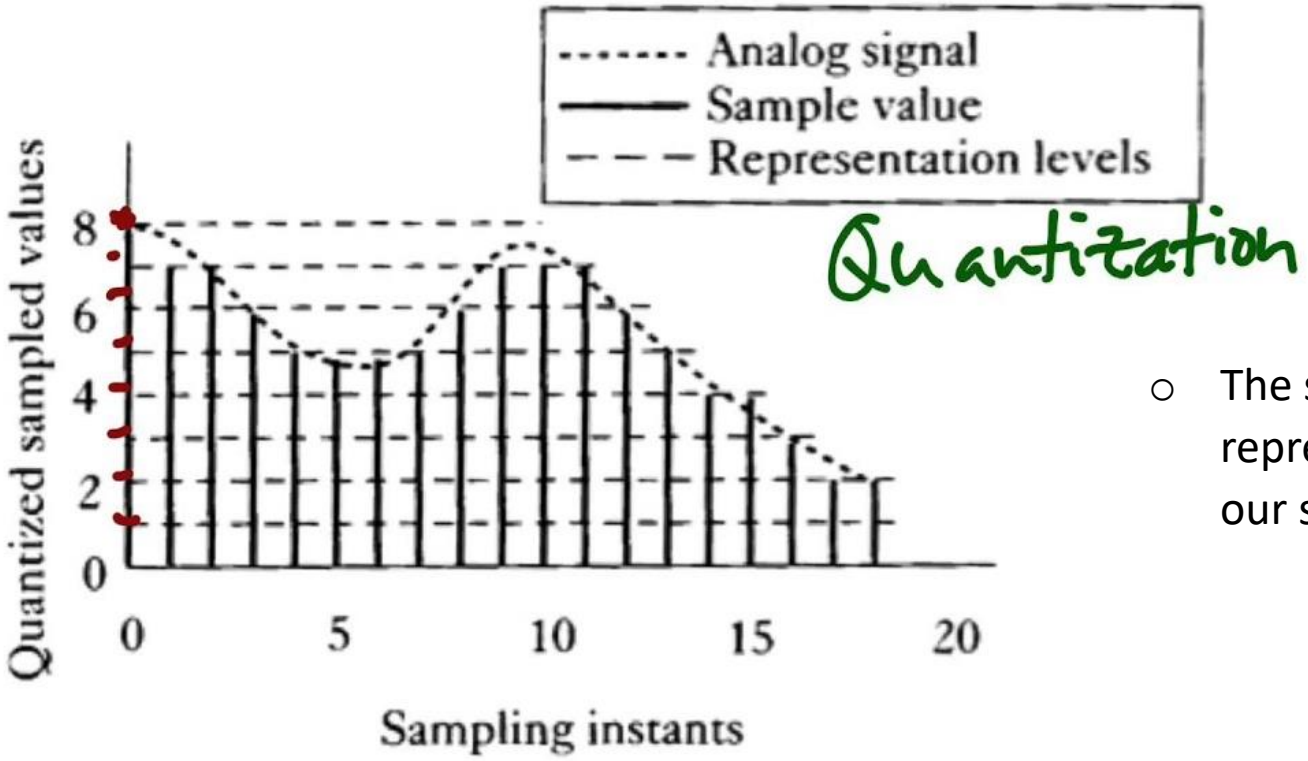


(a) Quantized sampling with 8 representation levels (3 bits per sample).

- The spacing between two adjacent representation levels is called quantum size our step-size.

# I/O characteristics – quantiser

- The input -output characteristic of uniform quantiser,  is a staircase function.
- The origin lies in the middle of the rising part of staircase function.
- Let there be 'L' levels for an analog signal with $V_{p\text{-}p}$=2Vp.

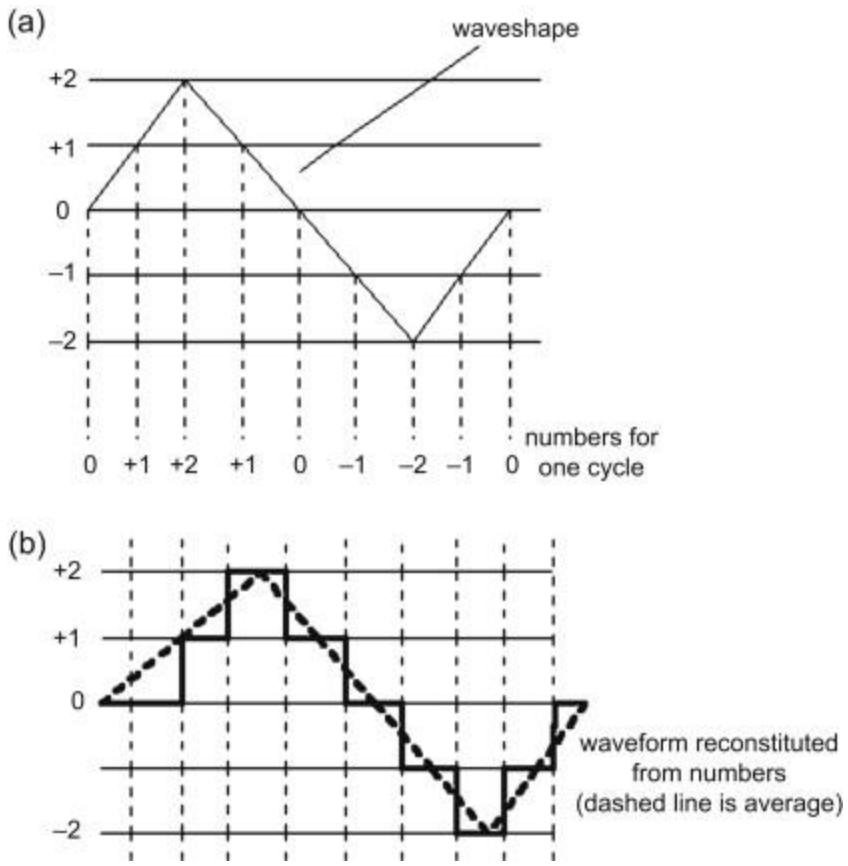

# Quantiser Types

- Uniform type and Non-uniform type

1. Uniform type →if the step size is uniformly spaced → mid-thread and mid-rise.

2. Non-uniform type→if the step size is not uniform.

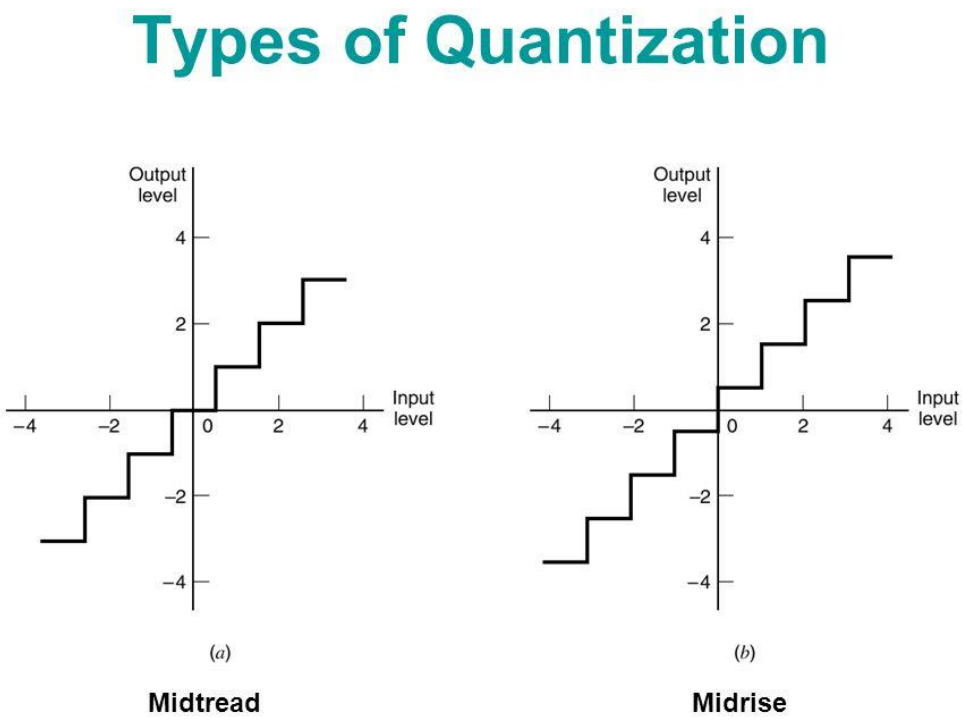

# Practical example – Quantisation error

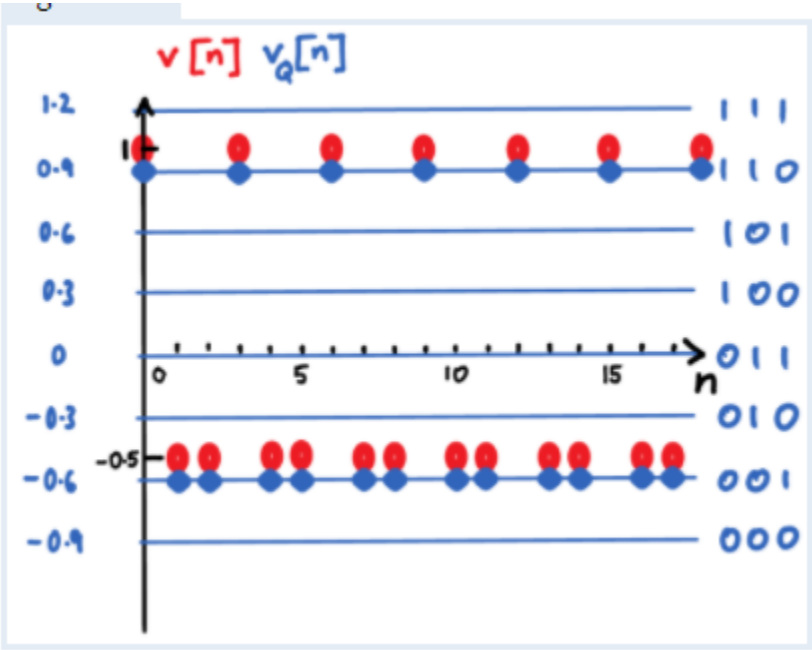


| Sequence | $n = 0$ | $n = 1$ | $n = 2$ | $n = 3$ |
|---|---|---|---|---|
| Samples $v[n]$ | 1 | $-0.5$ | $-0.5$ | 1 |
| Quantized samples $v_Q[n]$ | 0.9 | $-0.6$ | $-0.6$ | 0.9 |
| Quantization error $e[n] = v[n] - v_Q[n]$ | 0.1 | 0.1 | 0.1 | 0.1 |
| 3-bit representations | 110 | 001 | 001 | 110 |

Thus the degradation is limited to half the step and hence the quantisation error is bounded to size **±Δ/2.**

**{-Δ/2 ≤ q ≤ +Δ/2}**

# Quantisation noise

- The quantisation process introduces some error defined to as the difference between the input signal m and the output signal v.
- Let the input sample Value be m and the output sample value be v.

$$q=m-v$$

- Let the input signal 'x(t)' is of continuous amplitude lying in the range of ( $-V_{max}$ , + $V_{max}$ ) .

Then the step size of the quantiser is given by,

$$\Delta=2\ V_{max}/L$$

- L→total no.of representation levels.

- For uniform quantiser, the approximation will result in an error not larger than **± Δ/2** .

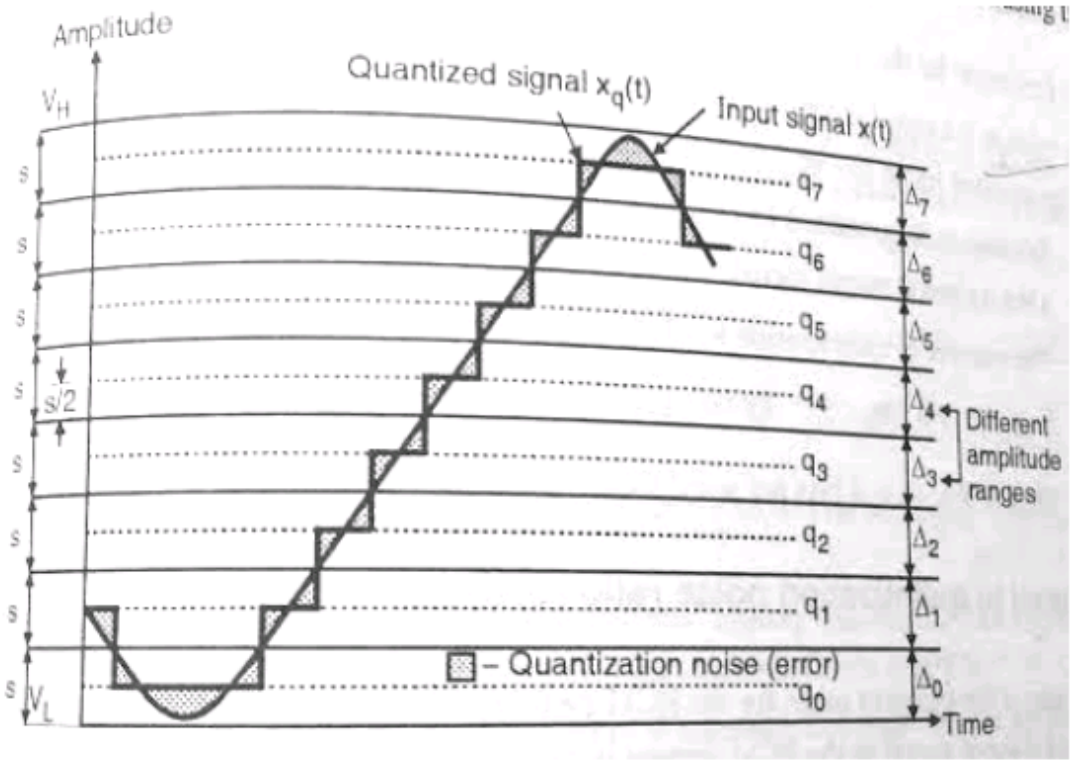


Fig: Process of quantization

# Will the errors due to quantization affect the quality?

- It is not necessary in fact to transmit the exact amplitudes of the samples.
- Because, any human sense can detect only the finite intensity difference.
- This means the original continuous signal may be approximated by a signal constructed of discrete amplitudes.

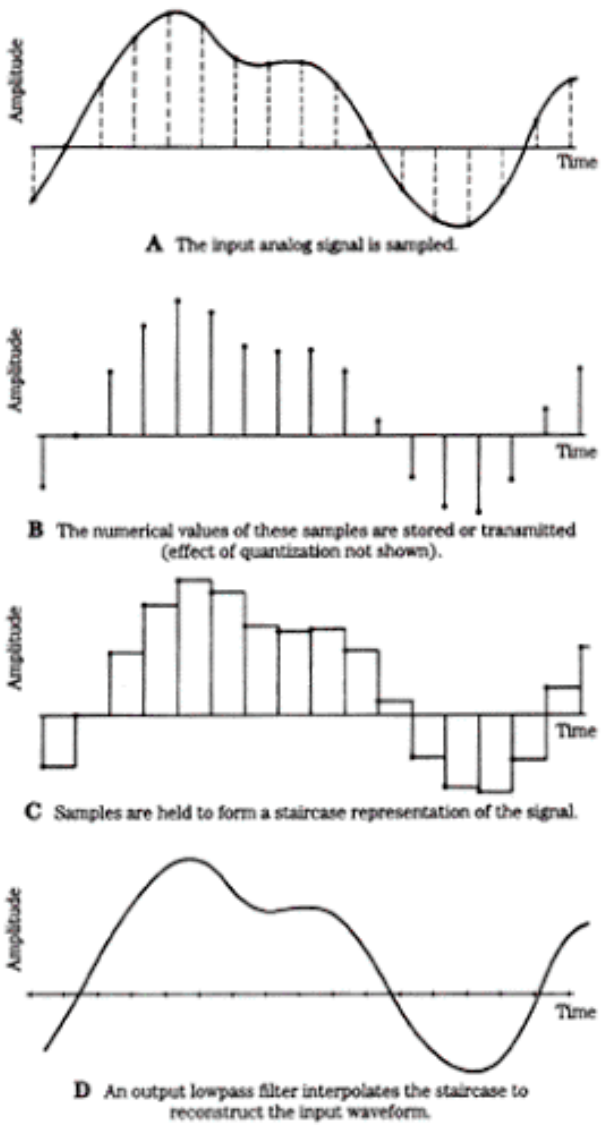

# To reduce Q- error

**Solution:**

For sufficiently small step size or if the no. of representation levels are larger, the error is much reduced and is uniformly distributed.

# Non-uniform quantisation

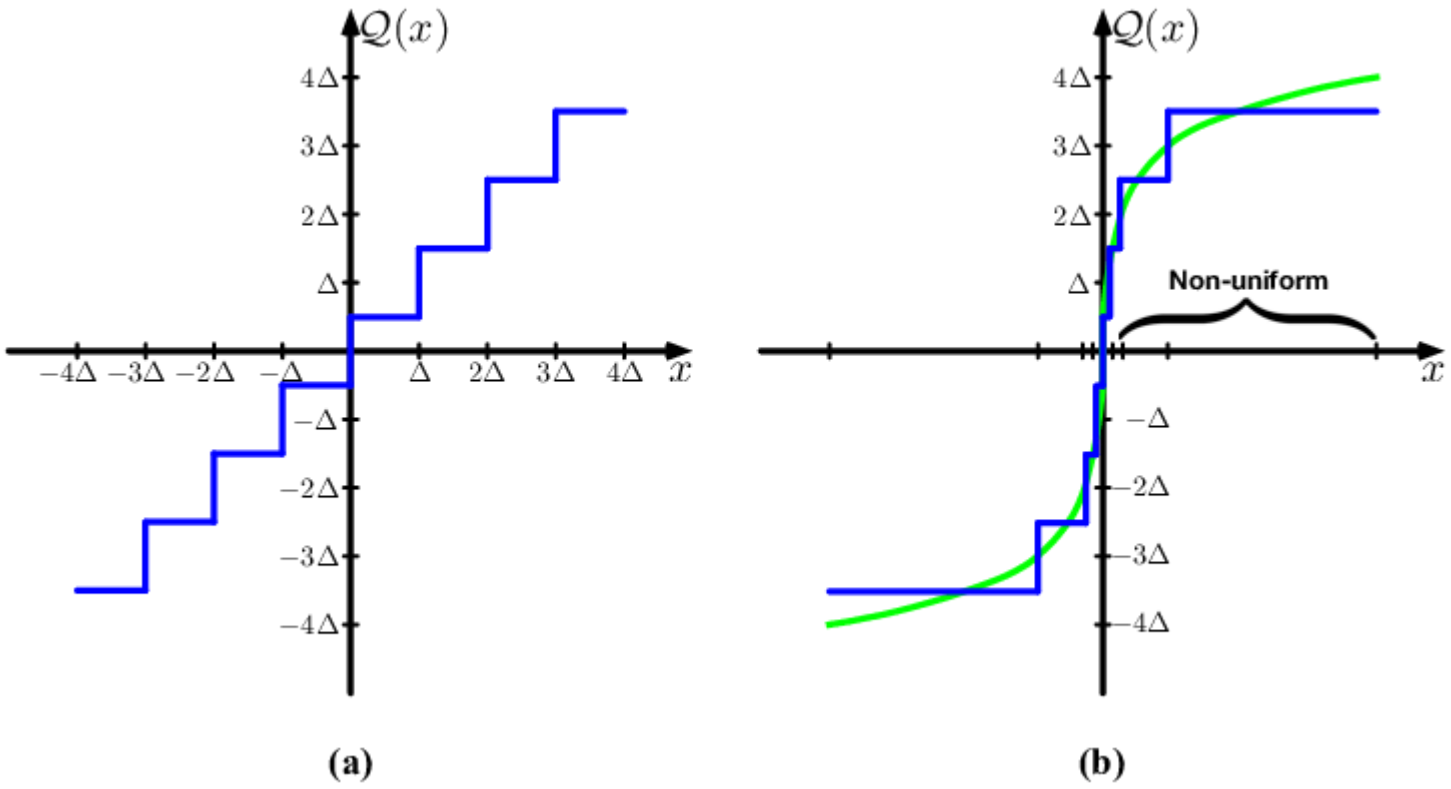

# Companding logic and types

- Types: μ-law ( NA & Japan) and A – Law ( Europe & rest of the world)
- μ-law : Reduce the dynamic range of the signal, thereby increasing the coding ( max. of 8 bits) efficiency with slight distortion
- A – Law: Internationally used , distortion level introduced is less.
- Difference: μ-law has a slightly larger dynamic range than the A-law.

| | | |
|---|---|---|
| Compression formula | $F(x) = \frac{\ln(1+\mu\lvert x\rvert)}{\ln(1+\mu)}\,\mathrm{sgn}(x)$ | $F(x) = \begin{cases} \frac{A\lvert x\rvert}{1+\ln A}, & 0 \le \lvert x\rvert < 1/A \\ \frac{1+\ln(A\lvert x\rvert)}{1+\ln A}, & 1/A \le \lvert x\rvert \le 1 \end{cases}\,\mathrm{sgn}(x)$ |

# Non –uniform quantisation

- Non-uniform Quantisation
- Compression – ( μ law and A-law)
- Companding and expanding

Fig: 2.14 MODEL OF NON UNIFORM QUANTIZER

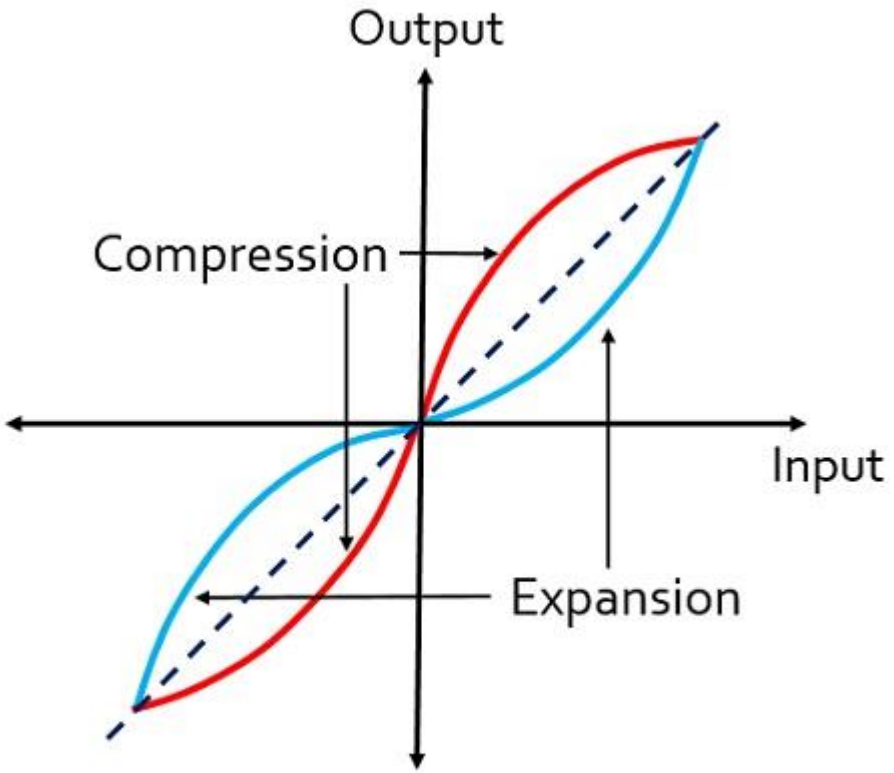


Companding Curve

Electronics Coach

# Step 3: Encoding

# Coding the Quantiser output

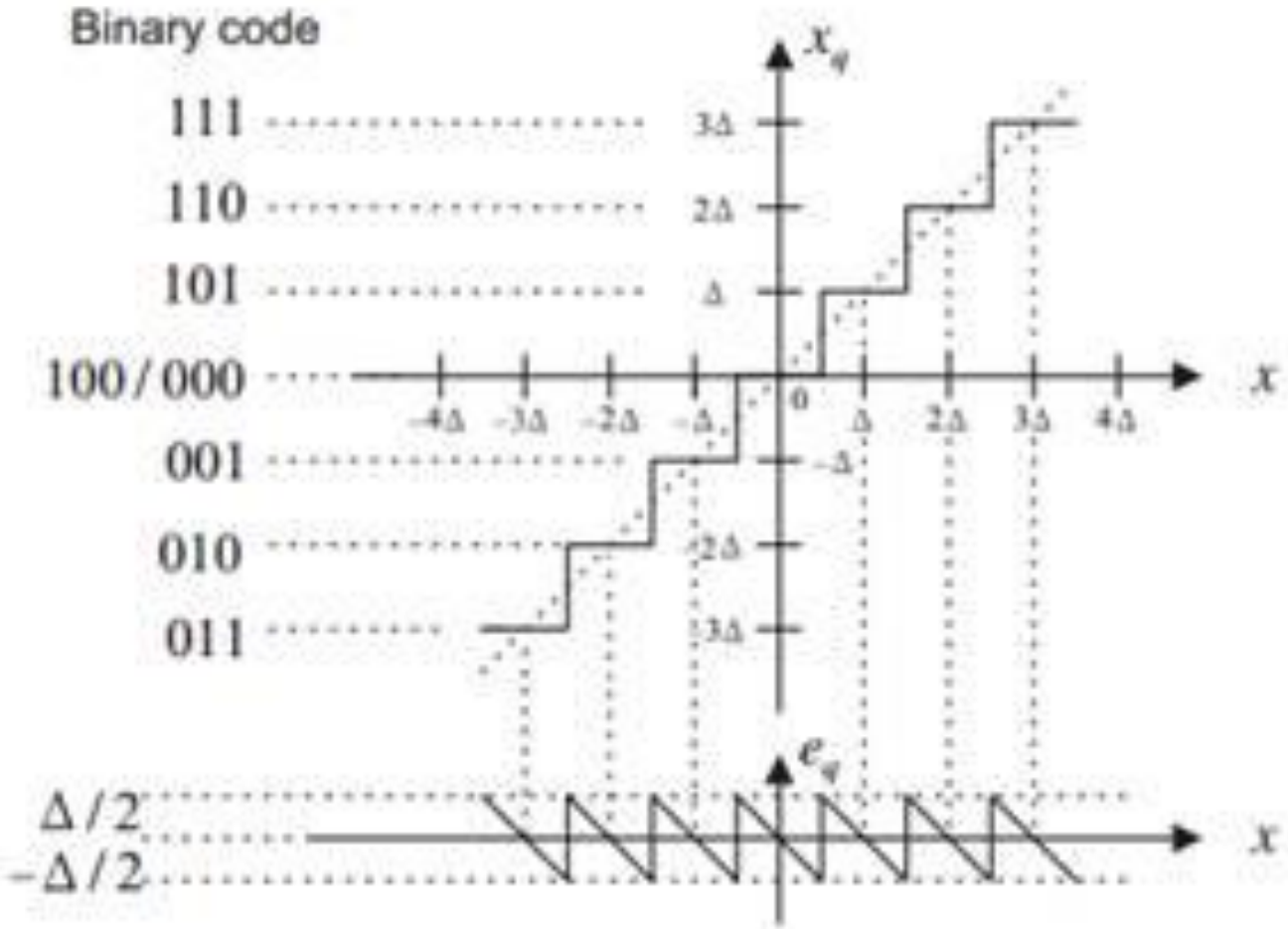


FIGURE 11.1

# Steps involved in Formatting process

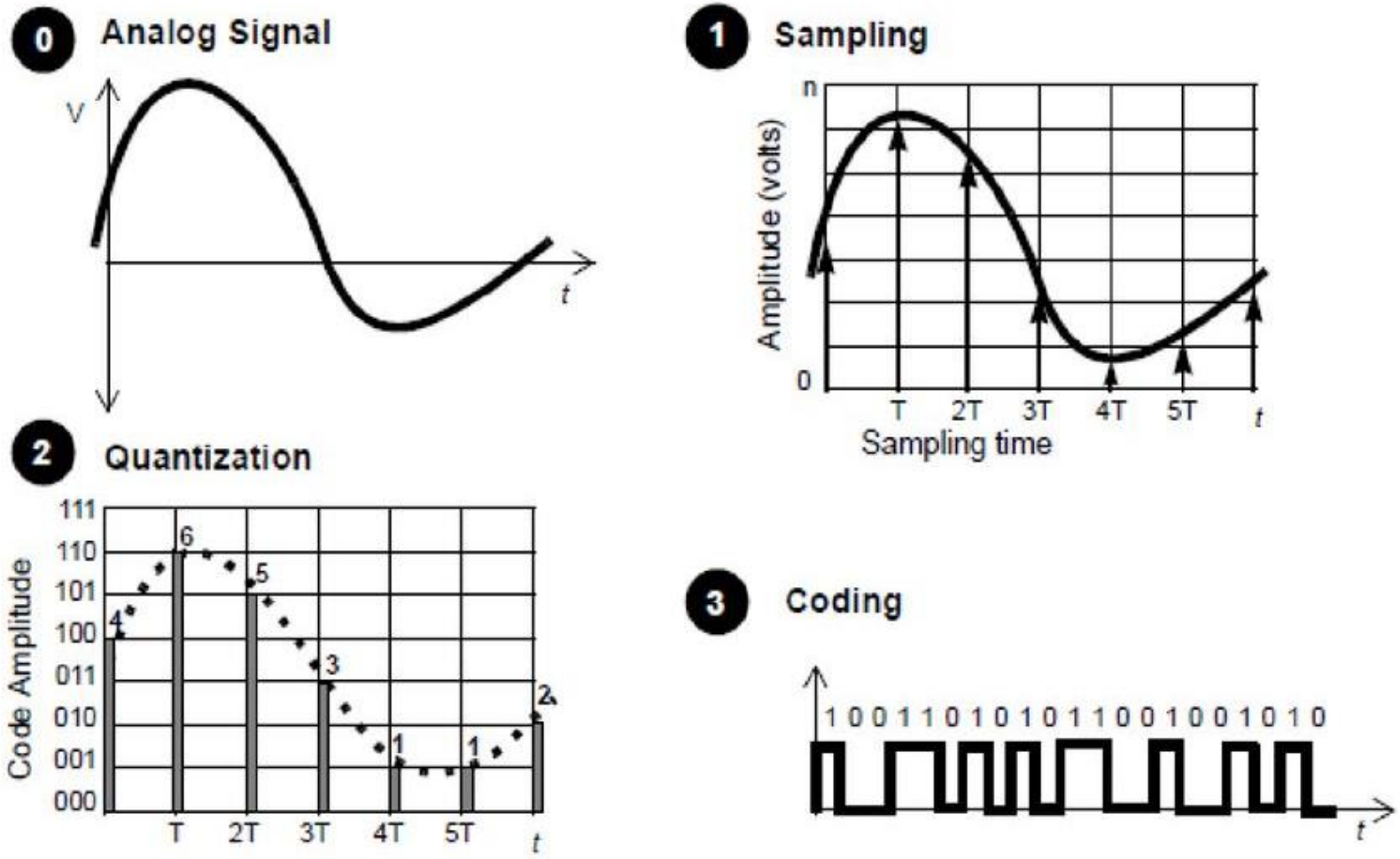


**Figure 1.2** The three steps of digitalization of a signal: sampling of the signal, quantization of the amplitude, and binary encoding.

# End of formatting

# References


- https://www.powershow.com/viewht/55e279-ZjU1M/Fundamentals_of_Digital_Communication_powerpoint_ppt_presentation
- https://www.iare.ac.in/sites/default/files/PPT/IARE_DC_PPT.pdf
- Images Courtesy: www.google.com

# PCM

Unit 1 module -2 ( NEP Syllabus)

Dr.K.Jayanthi

# PCM Transmitter section

PCM:

- Refers to a class of the baseband signal transmission obtained from the quantised PAM signals by **encoding each quantized sample into a digital code word**.
- The transmitter section of a Pulse Code Modulator circuit consists of Sampling, Quantizing and Encoding, which are performed in the analog-to-digital converter section.
- The low pass filter prior to sampling prevents aliasing of the message signal.

# PCM block diagram

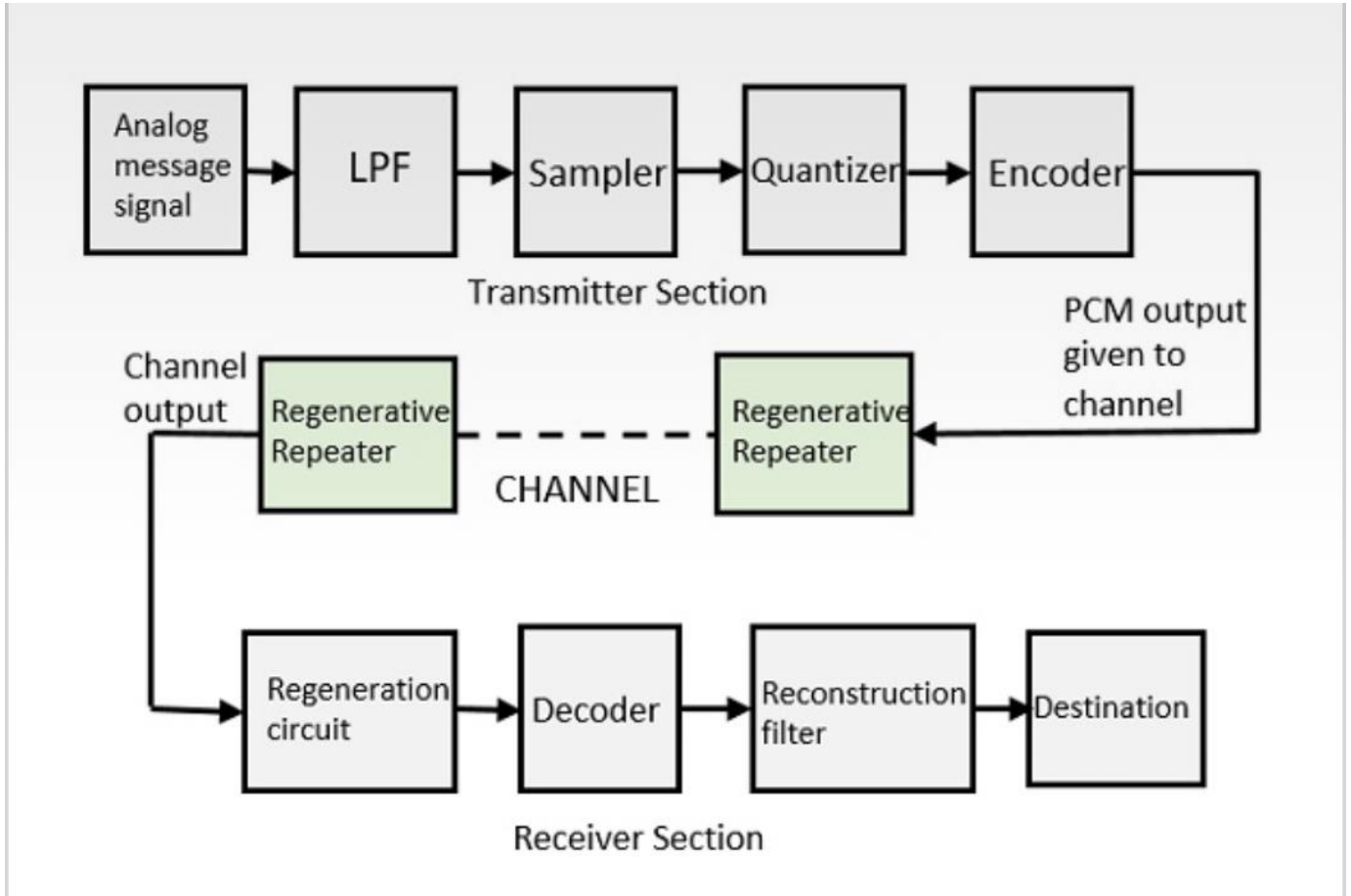

# PCM Transmitter section

- Practical Sampler – sample and hold circuit.
- The combined operation of sampling and quantisation generates a quantised PAM waveform.
- Hold capacitor – flat top samples
- Samples are then mapped onto one of the discrete amplitude levels fixed.

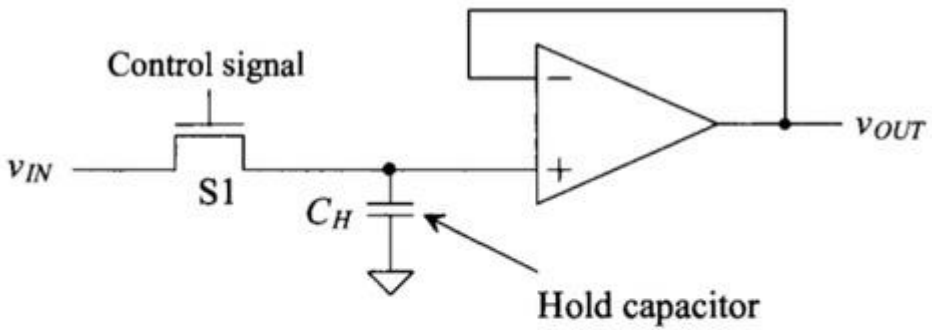


**Figure 28.7** Track-and-hold circuit using an output buffer.

# PCM Transmitter section

- Instead of transmitting the quantized sample values directly, Each **quantised level is assigned a code word/ number and so the code number** (pulse representation) can be transmitted instead of a the sample valve itself.
- For baseband transmission, the codeword bits will be transformed into pulse waveforms.

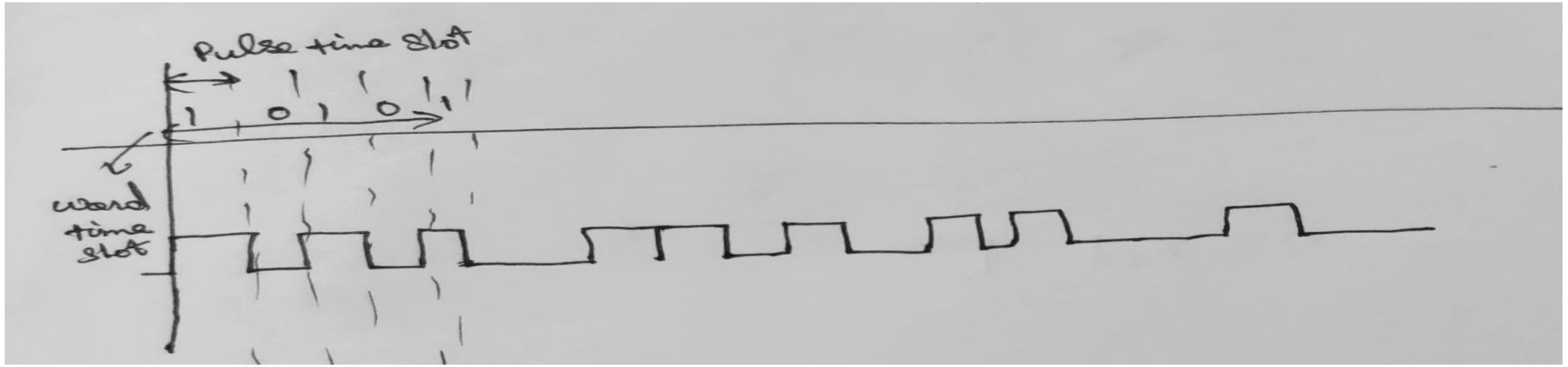

# PCM TRANSMITTER OUTPUT

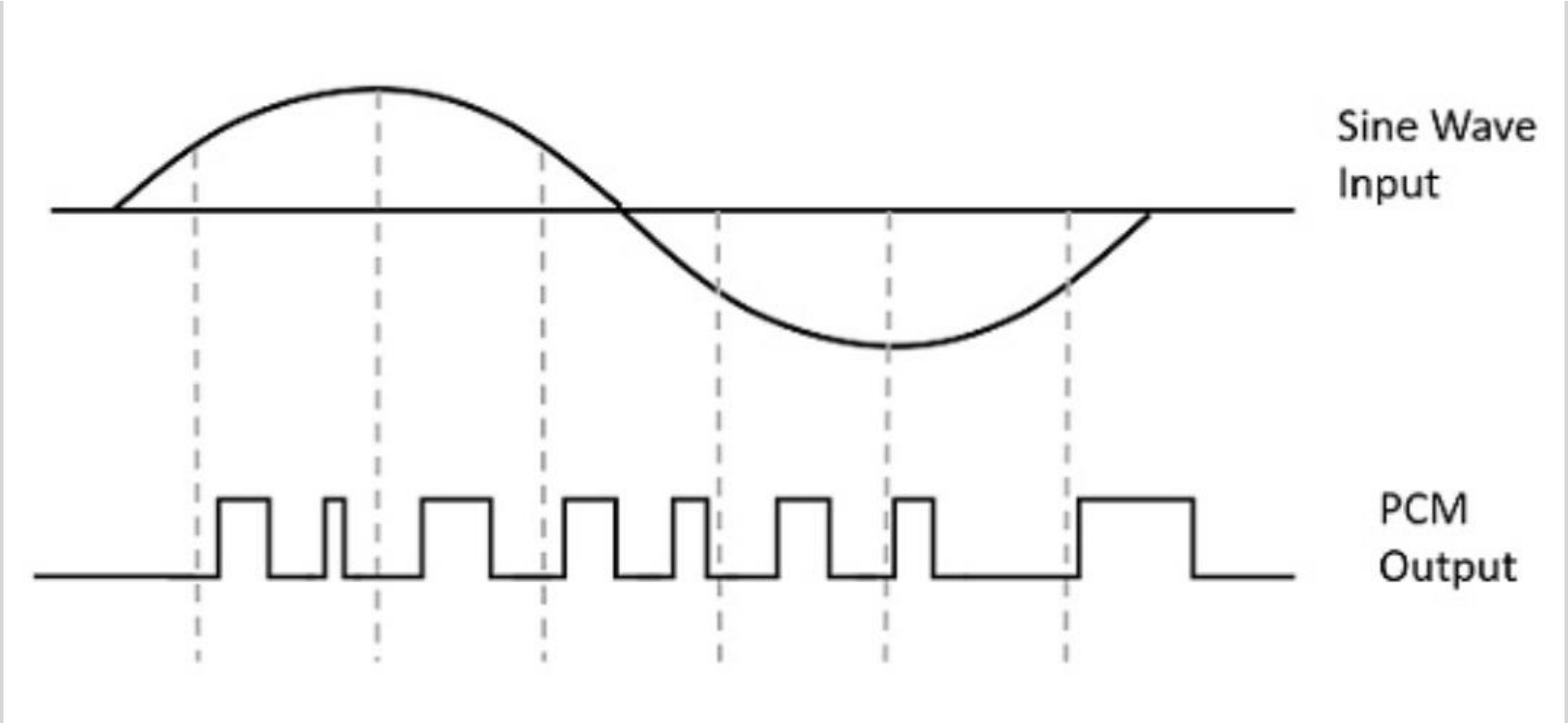

# PCM block diagram

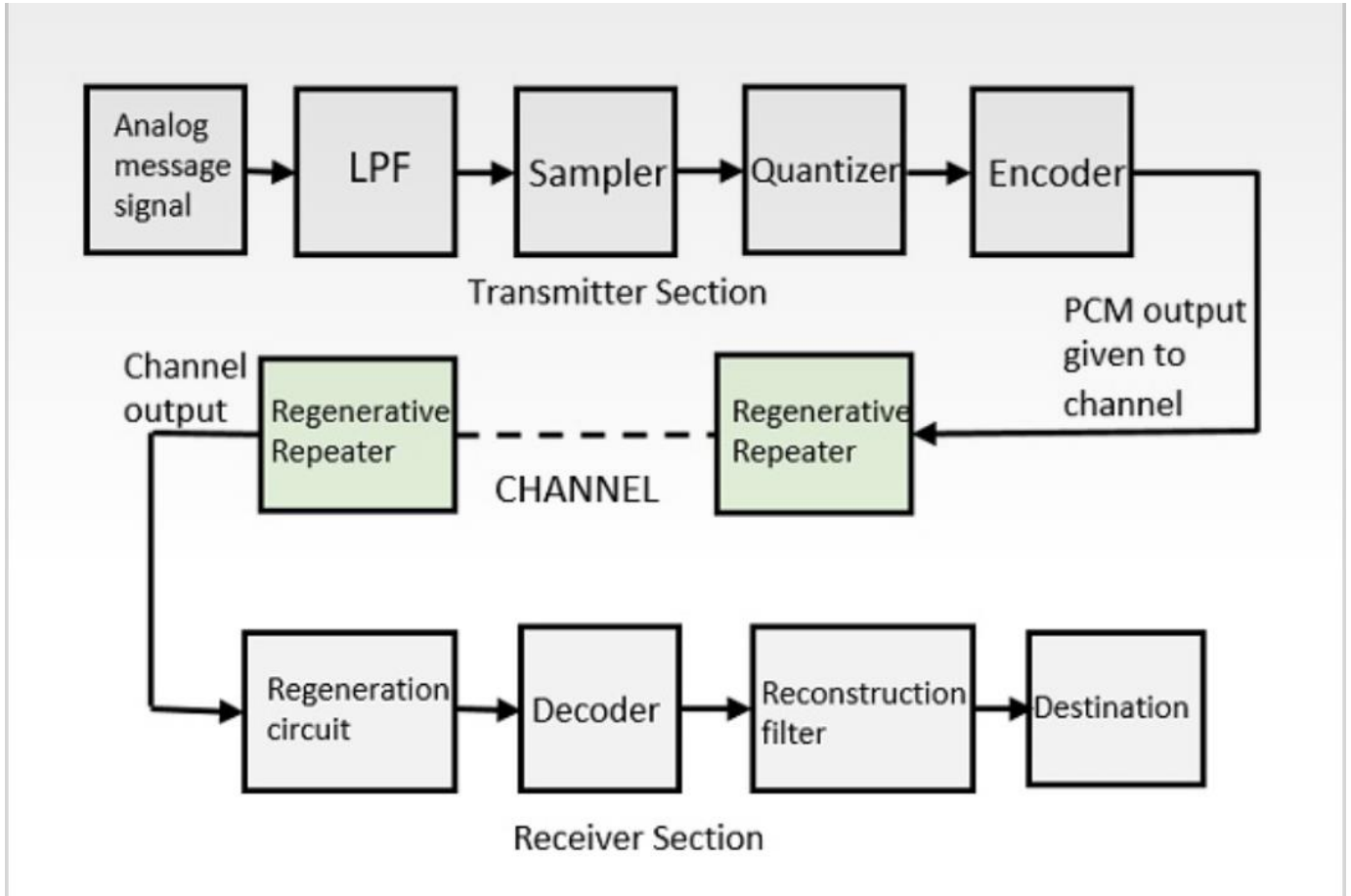

# PCM Receiver section

- The important feature of PCM is ability to control the effects of distortion and noise introduced in the channel.
- This capability is accomplished by
  - Reconstructing the PCM signal through a chain of regenerative repeaters.
- At the Receiver, in order to reconstruct the quantized signal - ??
    - To just check for the presence/ absence of a pulse
    - The amplitude of the pulse is not very important.

# PCM Receiver section

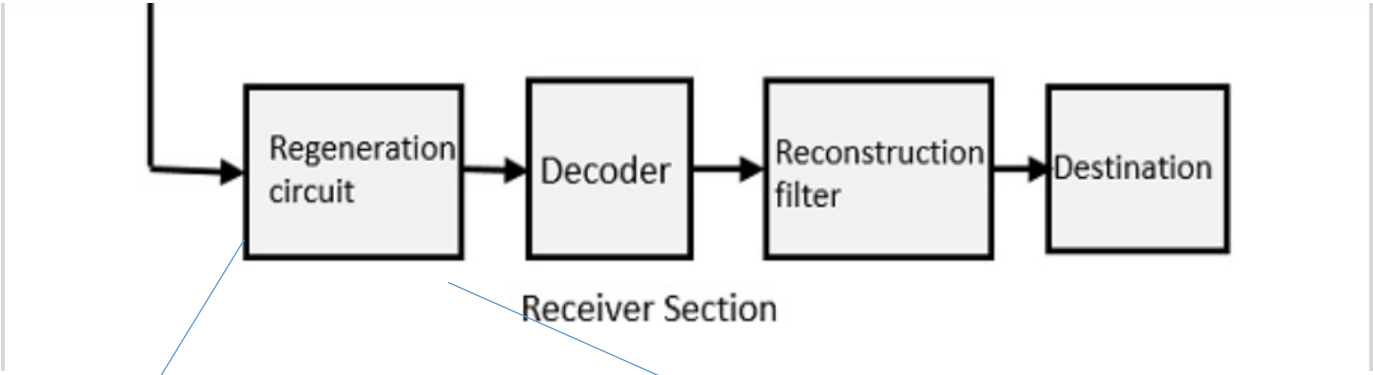


**Equaliser**:
It shapes the received pulse to compensate for the effects of amplitude and phase distortion.

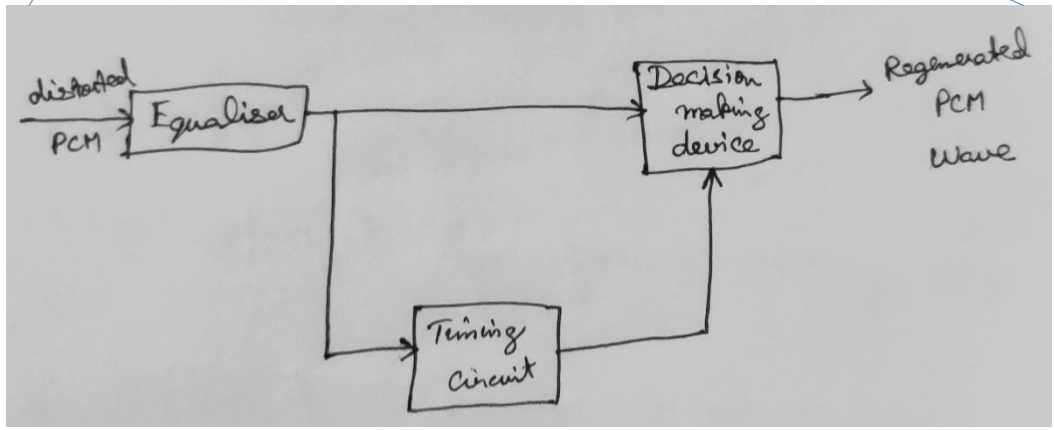


**Timing circuit:**

To provide a periodic pulse train derived from the received pulse for sampling the equalised pulses at sampling time instants, when (S/N) is maximum.

# Regenerative section of PCM

- The extracted sample is compared with a predetermined threshold in the decision making device.
- In each bit interval a decision is made whether the received symbol is a 1 or 0 on the basis of whether the threshold is exceeded or not.
- By this means, the **accumulation of distortion and noise is completely removed.**
- The **regenerated signal** is exactly the same as the signal originally transmitted except for some bit errors.

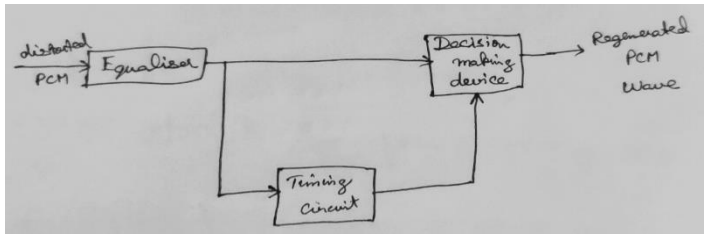

# Remaining PCM receiver sections

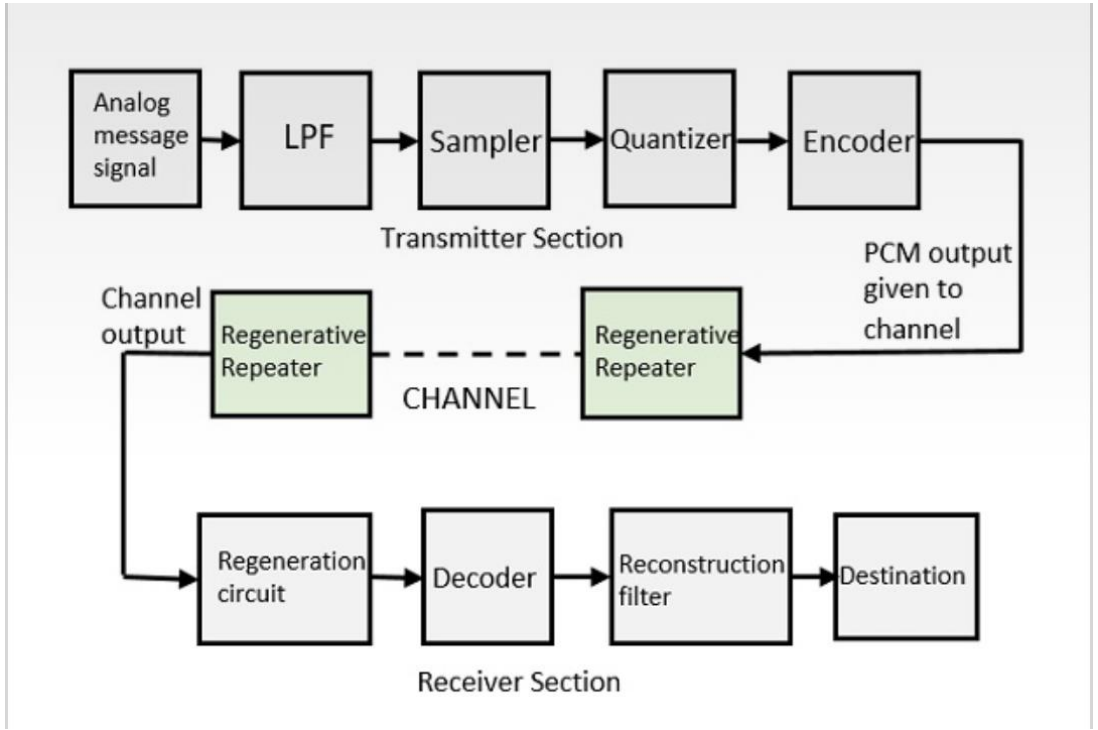


**Decoding**:

- The reshaped and cleaned pulses are **regrouped into codewords** and decoded into quantised PAM signal.
- The decoding process involves generating a pulse, the amplitude of which is the linear sum of all the pulses in the codeword.
- After the conversion is done by the regenerative circuit and the decoder, a low-pass filter is employed, called as the reconstruction filter ( LPF) to get back the original signal.
- Hence, the Pulse Code Modulator circuit digitizes the given analog signal, codes it and samples it, and then transmits it in an analog form.
- This whole process is repeated in a reverse pattern to obtain the original signal.

# Practical PCM transmission involves

- **Multiplexing**: All practical PCM-TDM is from different message source.
- Two PCM standards – European (E1 32 channels) and American ( T1 - 24 channels)
- **Synchronisation**: Proper timing operation is needed at the Receiver for PCM-TDM to operate successfully.
- Bit rate of PCM = n x fs, where n is the no. of bits per sample.

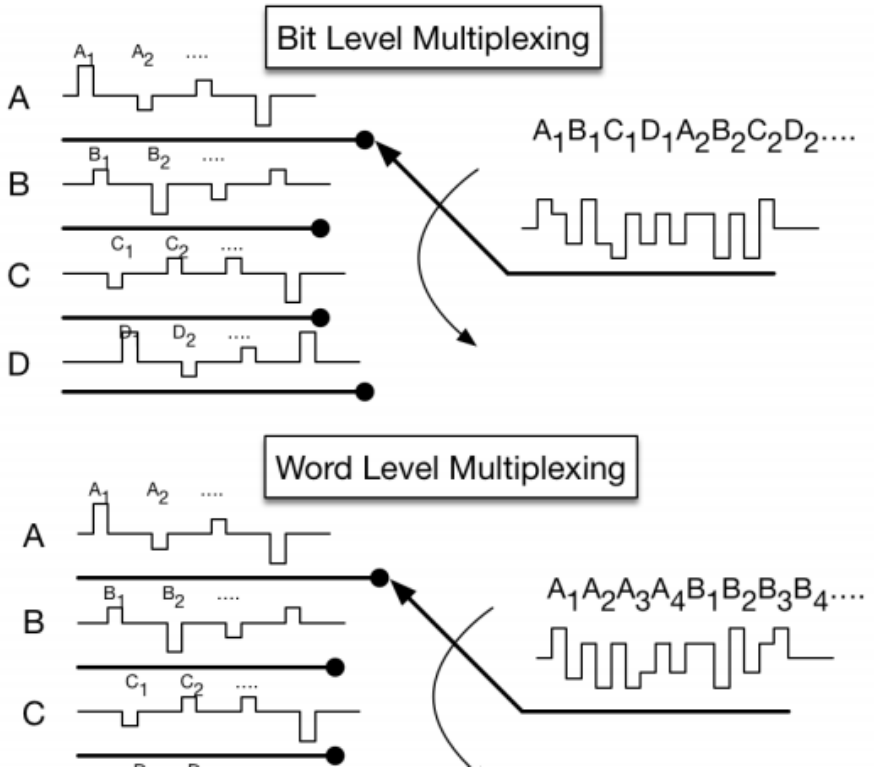

# Noise Effects:

- Performance of PCM is influenced by 2 major source of noise:
    - Channel noise – uncontrollable
    - Quantisation noise -controllable
- The Channel noise is introduced anywhere between the transmitter output and receiver input.
- It is always present and effect of channel noise is to **introduce bit errors** in the received signal.
- It degrades the reconstructed signal quality very quickly.

# 1. Channel Noise:

- If channel noise is small, there will be no problem in detecting the pulse.
- On the other hand, if the channel noise is large enough, it affects the detection process.
- The net effect will introduce reconstruction errors. More frequently the bit error occurs, the more dissimilar the received output is when compared to the message signal.
- The quick degradation of output signal quality with channel-induced errors is called as threshold effect.
- The quality of information transmission through PCM is measured in terms of average probability of symbol error or error rate → fn(Eb/No).

# Intersymbol Interference ( ISI)

- If the channel is bandlimited,  it introduces dispersion or spreads the pulse waveform passing through it.
- If channel Bandwidth > symbol Bandwidth, the spreading of pulse is very slight.
- But if channel Bandwidth < symbol Bandwidth, spreading exceeds the symbol duration and causes the pulses to overlap.
- This overlapping of pulses is referred to as ‘ISI’ system degradation.
- Pulse shaping or Equalisation is essential to counteract ISI.

# 2. Quantization noise:

- It is introduced at the transmitter and is carried all the way to the receiver.
- Unlike channel noise, quantisation noise is signal-dependent.i.e, It disappears when the message signal is switched off.
- It can be controlled through the **use of adequate number of quantisation levels in the quantiser** and through selection of a companding strategy matched to the input signal.

# Advantages of PCM

- Ruggedness to channel noise and interference.
- Efficient regeneration of the coded signal.
- Comparative ease with which messages can be dropped or reinserted in TDM-PCM system.
- Secure transmission through encryption standards.
- Compatible with other forms of digital data transmission , therefore a uniform format is used for transmission.

# Applications

- Digital telephony
- Digital audio applications like digital audio broadcasting

# Compromises made in PCM

- When a voice/video is sampled at a very high rate→ then the resulting sampled signal is found to posses high correlation value between the adjacent samples.
- (i.e,) Not much difference between the adjacent samples is present.
- If such samples are PCM encoded and transmitted it contains lot of redundant information.
- **Increased channel bandwidth →Broadband channels**.
- If the redundancy is removed, a much efficient coded signal can be got.

# Variants of PCM

- Differential PCM  - DPCM

# Differential PCM

- If the redundancy is removed a much efficient coded signal can be got.
- If at every sampling instant (K), if the difference between the sample value $m_k$ and $m_{k-1}$ is transmitted.
- Then by simply adding up the changes, the receiver can regenerate waveform identical to that of m(t).
- In such a scheme, since the differences are only sent, $(m_k - m_{k-1})$ ,which is relatively smaller than the actual sample value.
- **Only fewer quantisation levels ( L) will be required to quantize the difference than that are required to quantize the actual samples.**
- L = function of $(V_h - V_L)$, where L denotes the number of quantisation levels.

# About DPCM

- If the redundancy is reduced, then the overall bitrate will decrease and the number of bits required to transmit one sample will also reduce. This type of digital pulse modulation technique is called differential pulse code modulation.
- The DPCM works on the principle of prediction.
- The value of the present sample is predicted from the previous samples. The prediction may not be exact, but it is very close to the actual sample value.

# Principle behind the DPCM Transmitter

- The signal's value from the present sample to the next sample does not differ by a large amount.
- Therefore, the adjacent samples of the signal carry the same information with a small difference.
- When these samples are encoded by the standard PCM system- then ----------???

# DPCM - Transmitter

- The transmitter consists of comparator, quantizer, prediction filter, and an encoder.
- Prediction filter ? - "predicts the present samples with previous samples“
- Idea here is to send the difference D or error signal and allow the receiver to add this error with the previous sample it has …(predict from the previous PCM samples using the same predictor)

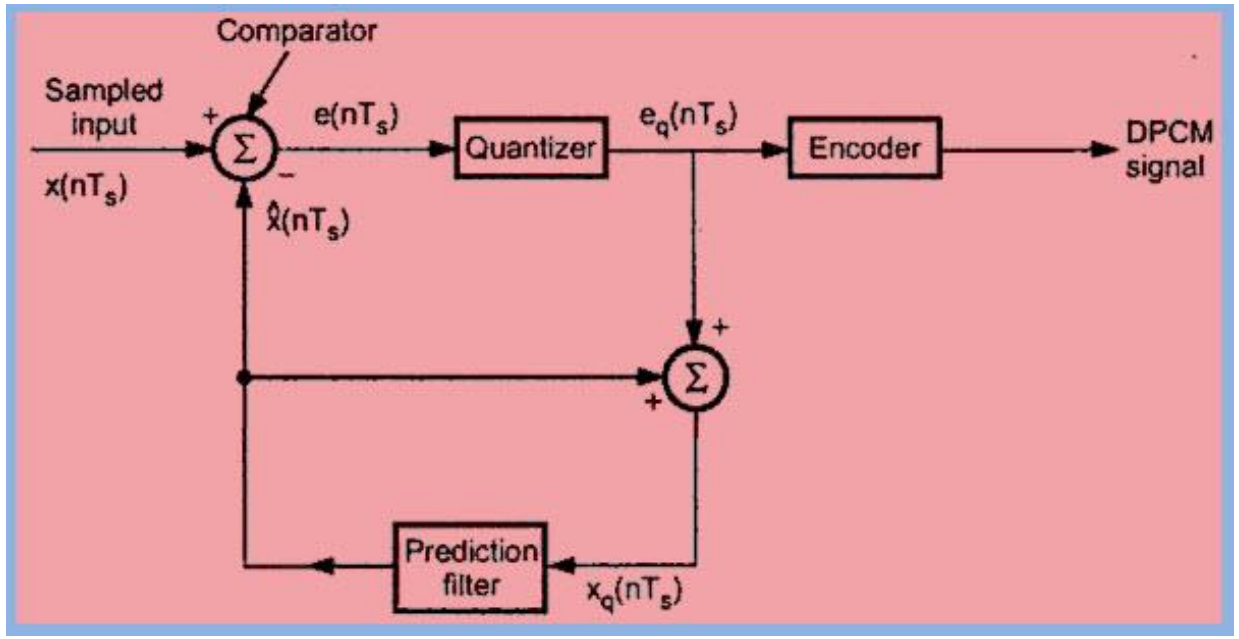


$$\hat{x}[n] \triangleq a_1\, x[n-1] \;+\; a_2\, x[n-2] \;+\; a_3\, x[n-3] + \ldots + a_N\, x[n-N]$$

diction error is

$$e[n] \triangleq \hat{x}[n] - x[n]$$

# Transmitter analysis

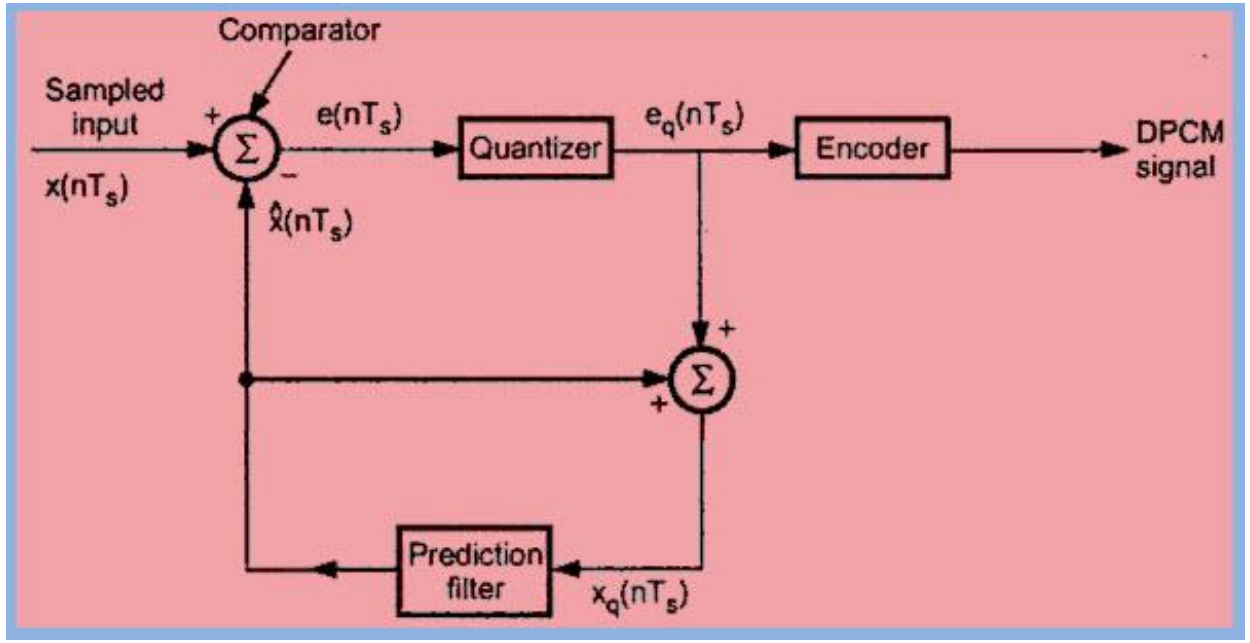


- The sampled signal is by x(nTs) and the predicted signal is x^(nTs).
- The comparator finds out the difference between the actual sample value x(nTs) and the predicted value x^(nTs) for each sampling time. This is called signal error and it is denoted as e(nTs)
- e(nTs)= x(nTs)- x^( nTs) …….(1)

# Prediction filter function

- The quantizer output signal eq(nTs) and the previous prediction is added and given as input to the prediction filter, this signal is denoted by xq(nTs) – for better prediction.
- Due to good prediction, quantized error signal eq(nTs) is very small and can be encoded by using a small number of bits. Thus the number of bits per sample is reduced in DPCM.
- The quantizer output is,

  eq(nTs)= e(nTs)+ q(nTs) ……(2)
- The prediction filter input xq(nTs) is obtained by sum of x^(nTs) and the quantizer output eq(nTs).

  xq(nTs) = x^(nTs)+ eq(nTs)……. (3)

# Analysis contd..

substituting the value of eq(nTs) from the equation (2) in equation (3) we get,

xq(nTs) = x^(nTs)+ e(nTs)+ q(nTs)……. (4)

From eqn. (1),

x^( nTs) = x(nTs) - e(nTs)……. (5)

So, finally, we get:

**xq(nTs) = x(nTs)+ q(nTs) -----(6)**

quantized version of sampled signal = sum of the original sample value + quantisation error ---- which is free from predictor terms.

# DPCM receiver Block diagram

- DPCM works by the difference between actual samples and predicted samples.
- The input given to the decoder is processed and that output is summed up with the output of the predictor, to obtain better output.
- the decoder will reconstruct the quantized form of the original signal.
- Therefore the signal at the receiver differs from the actual signal by quantization error q(nTs), which is introduced permanently in the reconstructed signal.

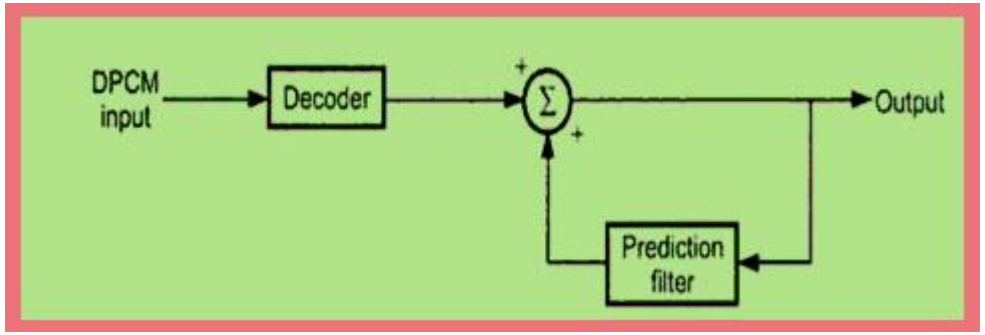

# Applications of DPCM

- DPCM technique mainly used Speech, image and audio signal compression.
- The DPCM conducted on signals with the correlation between successive samples leads to good compression ratios.
- Works fine with video signals in real time.
- Medical image compression

# Advantage/ limitation

- Required No. of bits per sample is lesser than PCM.
- So lesser bandwidth requirement.
- Bit redundancy is completely removed unlike PCM.
- The signal quality is inferior to PCM why??.

# Problem in DPCM

- In digital systems, the complication is that the differences are not transmitted exactly because of the quantization.
- If the number of encoded bits are restricted, the differences may be maximum than that can be accommodated.
- As a result, there may be at sometime a large discrepancy between the original signal m(t) and m^(t).

signal quality is inferior to PCM

# Delta Modulation ( DM)

- DM is a special case of DPCM scheme, in which the difference signal is encoded by using just a single bit.

**Concept**:

- In delta Modulation ,the incoming message signal is over sampled (i.e,) at a rate higher than Nyquist rate to purposely increase the correlation between adjacent samples.
- This is done to permit the use of a simple quantising statergy.
- DM provides a staircase approximation to the oversampled version of message signal m(t).

# Illustration of DM

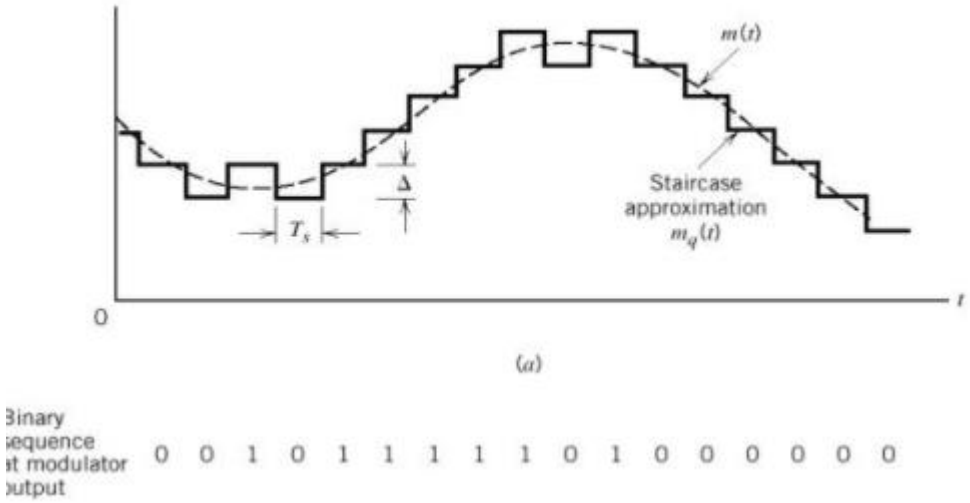


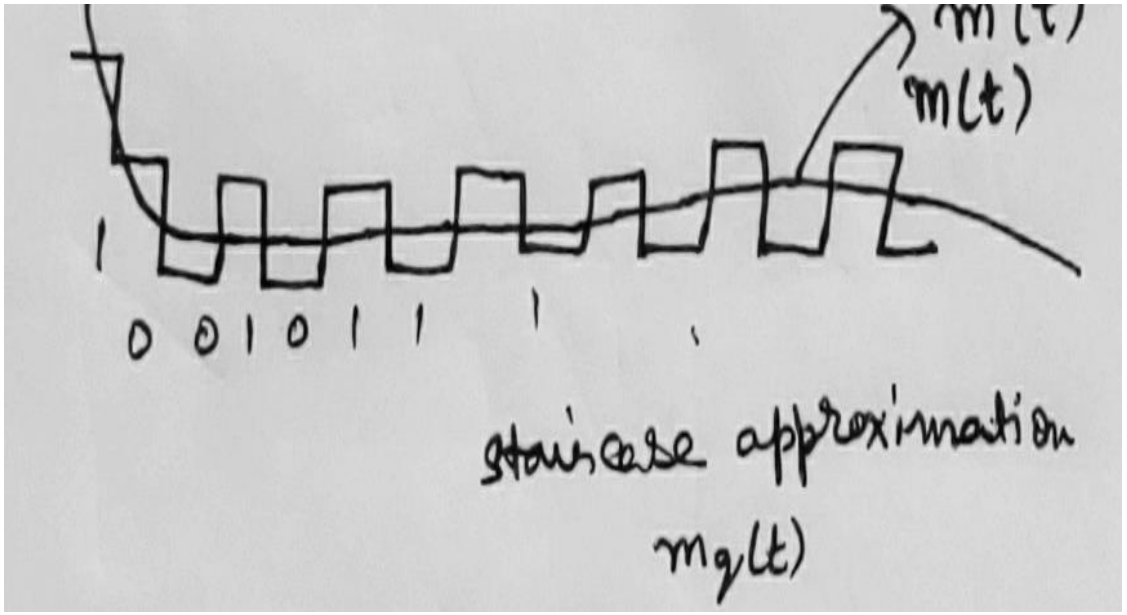


The difference between the input and the approximation is that the quantiser has two levels namely ±**Δ**, which corresponds to positive and negative differences

# Important facts about DM

- In DM, we need to know only whether m(t) is larger or smaller and not the magnitude of the difference.
- Usage of a simplified Quantiser strategy.
- As long as the signal do not changes rapidly, the step size is namely $\pm\Delta$, which corresponds to positive and negative differences.
- The quality is moderate.
- The design of the modulator and the demodulator is simple.
- The stair-case approximation of output waveform.

# DPCM vs DM

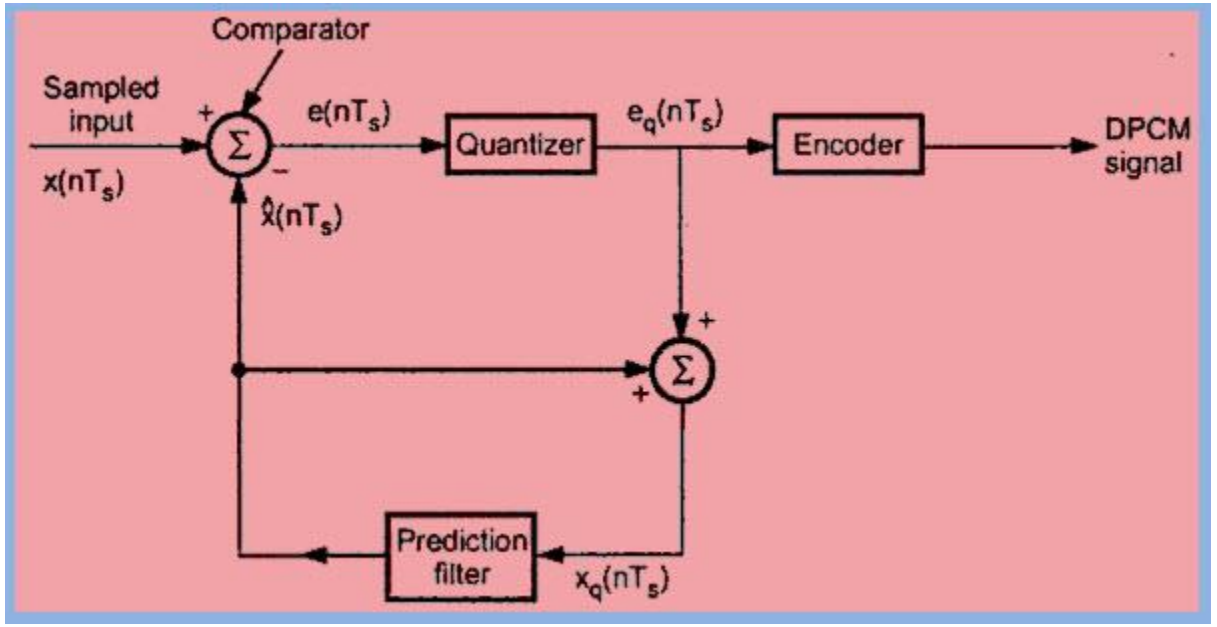
Comparator
Sampled input
x(nT_s)
e(nT_s)
Quantizer
e_q(nT_s)
Encoder
DPCM signal
x̂(nT_s)
Prediction filter
x_q(nT_s)

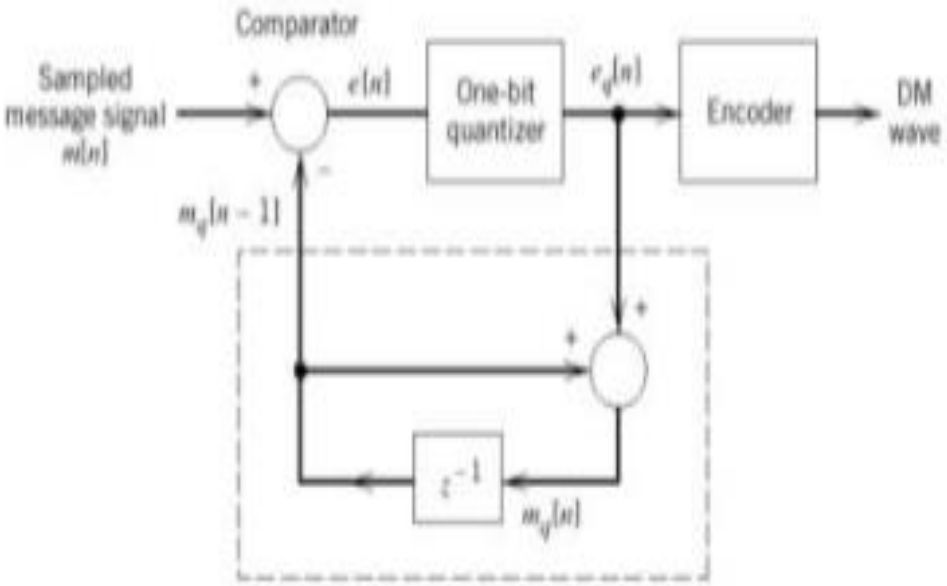
Comparator
Sampled message signal
One-bit quantizer
Encoder
DM wave

# Delta modulator

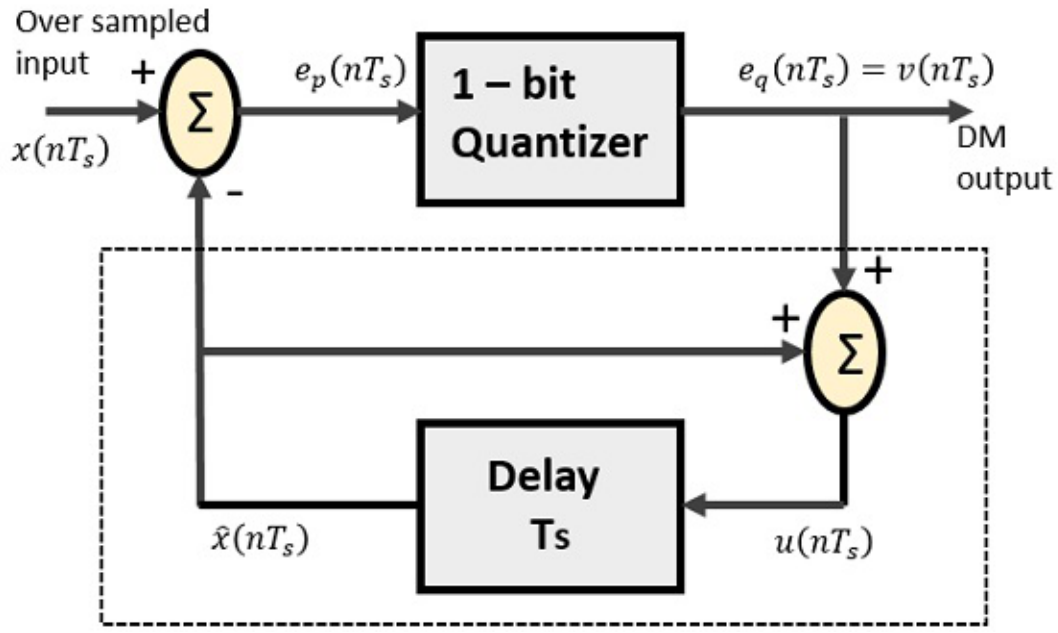


- The Delta Modulator comprises of a 1-bit quantizer and a delay circuit along with two summer circuits.
- The predictor circuit in DPCM is replaced by a simple delay circuit in DM.
- A Stair-case approximated waveform will be the output of the delta modulator with the step-size as delta (**Δ**). The output quality of the waveform is moderate.

# DM output

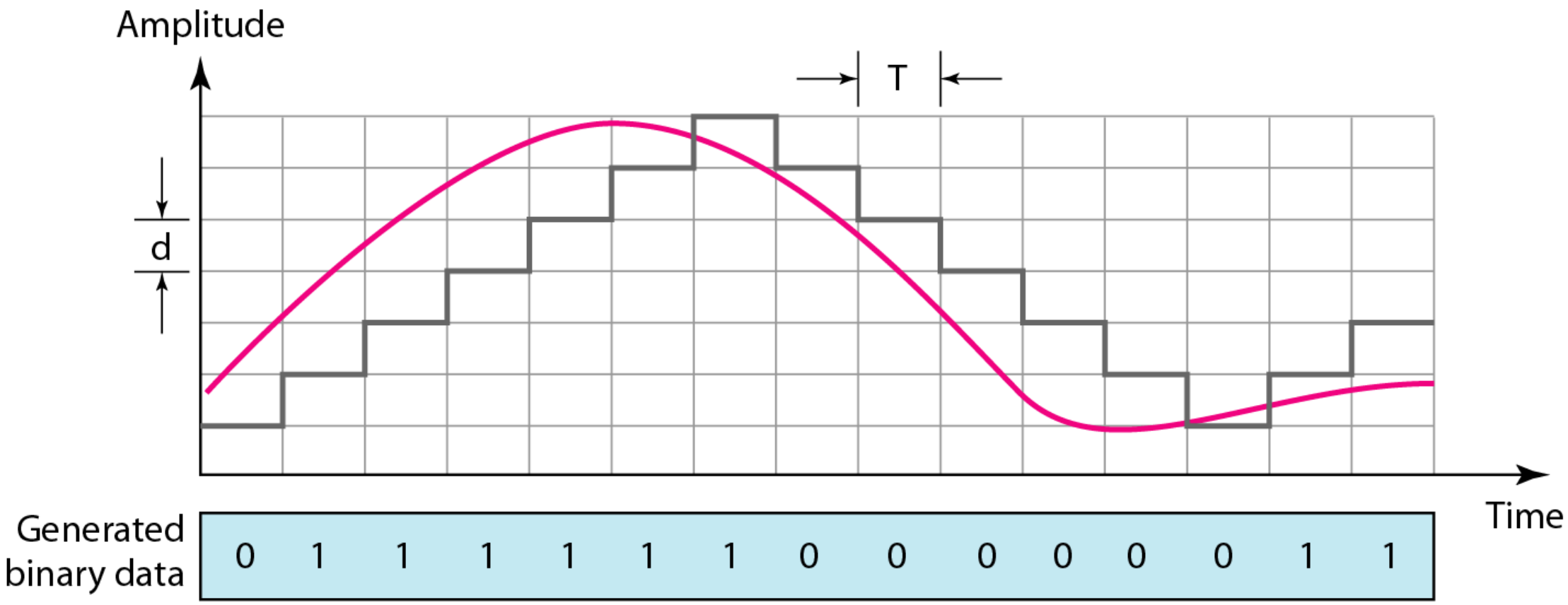

# Delta demodulator

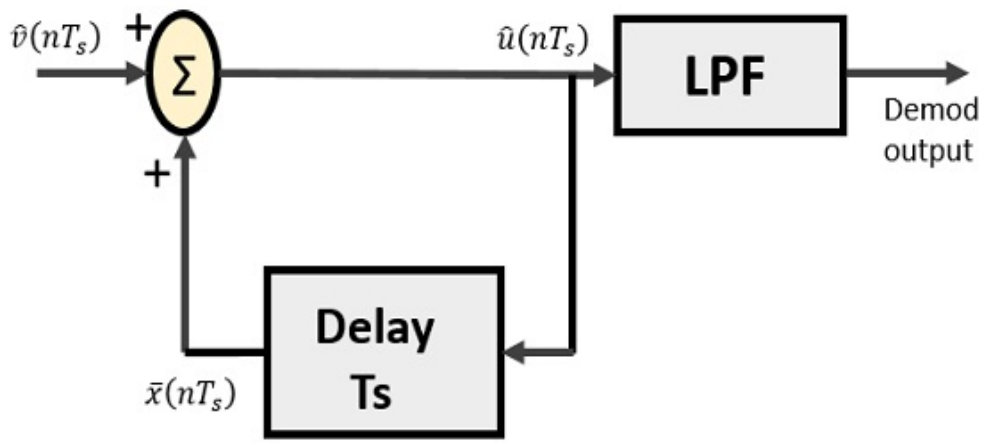


- The delta demodulator comprises of a low pass filter, a summer, and a delay circuit.
- The predictor circuit is eliminated here and hence no assumed input is given to the demodulator.
- A binary sequence will be given as an input to the demodulator.
- The stair-case approximated output is given to the LPF.
- Low pass filter is used for noise elimination for out-of-band signals.

# Advantages of DM Over DPCM

- 1-bit quantizer
- Very easy design of the modulator and the demodulator

However, there exists some noise in DM.

- Slope Over load distortion (when **Δ** is small)
- Granular noise (when **Δ** is large)

# Noise in Delta Modulation Systems

- slope overhead distortion
- granular noise

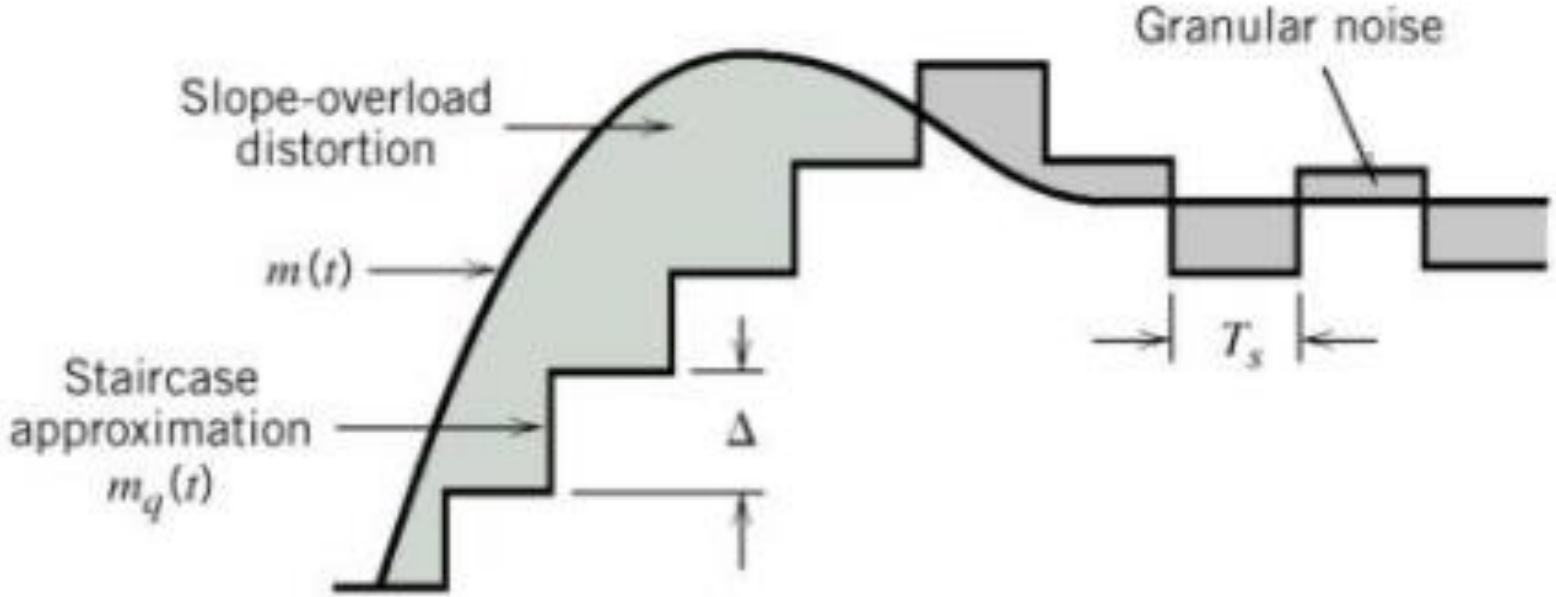

# Source of slope overload distortion

- Consider a signal m(t) ,which exhibits a sharp steep.
- This **distortion** arises because of large dynamic range of the input signal.
- m^(t) ( staircase function) cannot keep up or track with m(t).
- As a consequence the error m(t)- m^(t) becomes progressively larger by exceeding $\pm\Delta/2$.
- This occurs **when the step-size is too small** for the staircase approximately to follow it.

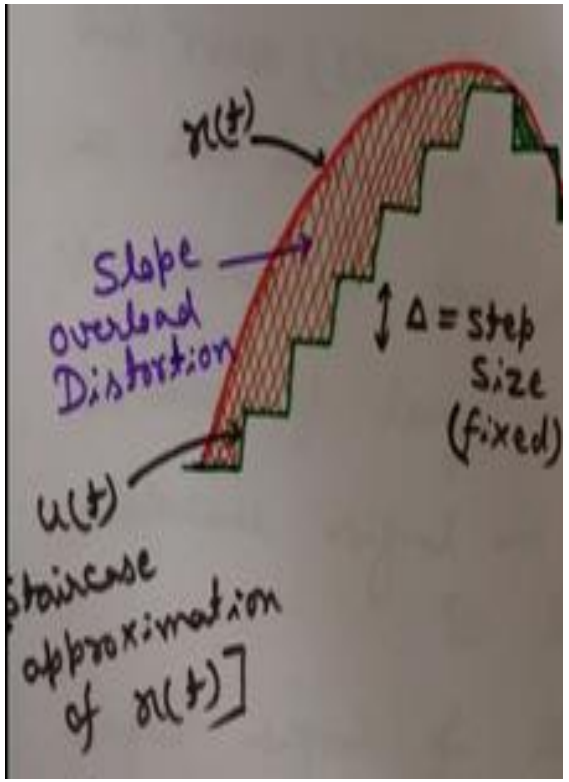

# Granular Noise

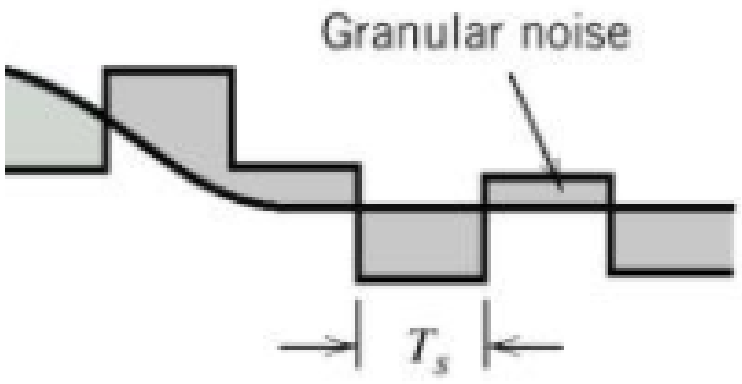


- In contrast to slope overload distortion, granular Noise occurs when the step size is too large relative to the local slope characteristics of the input m(t).
- This causes mˆ(t) to hunt around **a relatively flat segment** of the input.
- It is analogous to quantization noise in PCM system.

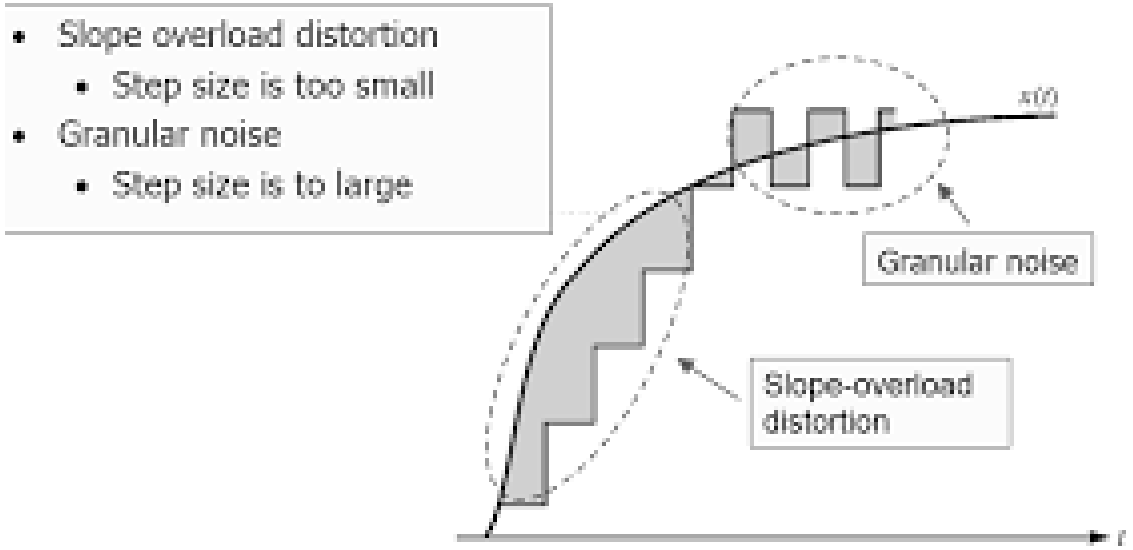

# Remedy

- Thus a large step size is needed to accommodate a wide dynamic range and a small step size is required for the proper representation of low level signals.
- The optimum step-size will compromise between slope -overload and granular Noise.
- To satisfy this requirement, the step-size is made to vary in accordance with input signal.

# Applications

- **Delta Modulation** is most useful in systems where timely data delivery at the receiver is more important than the data quality.
- This **modulation** is applied to ECG waveform for database reduction and real-time signal processing.

# Adaptive Delta modulation

- A larger step-size is needed in the steep slope of modulating signal and a smaller stepsize is needed where the message has a small slope.
- if we can control the adjustment of step-size, according to our requirement in order to obtain the sampling in a desired fashion.
- This is the concept of **Adaptive Delta Modulation**.
- ADM quantizes the difference between the value of the current sample and the predicted value of the next sample.
- It uses a variable step height to predict the next values, for the faithful reproduction of the fast varying values.

# ADM transmitter

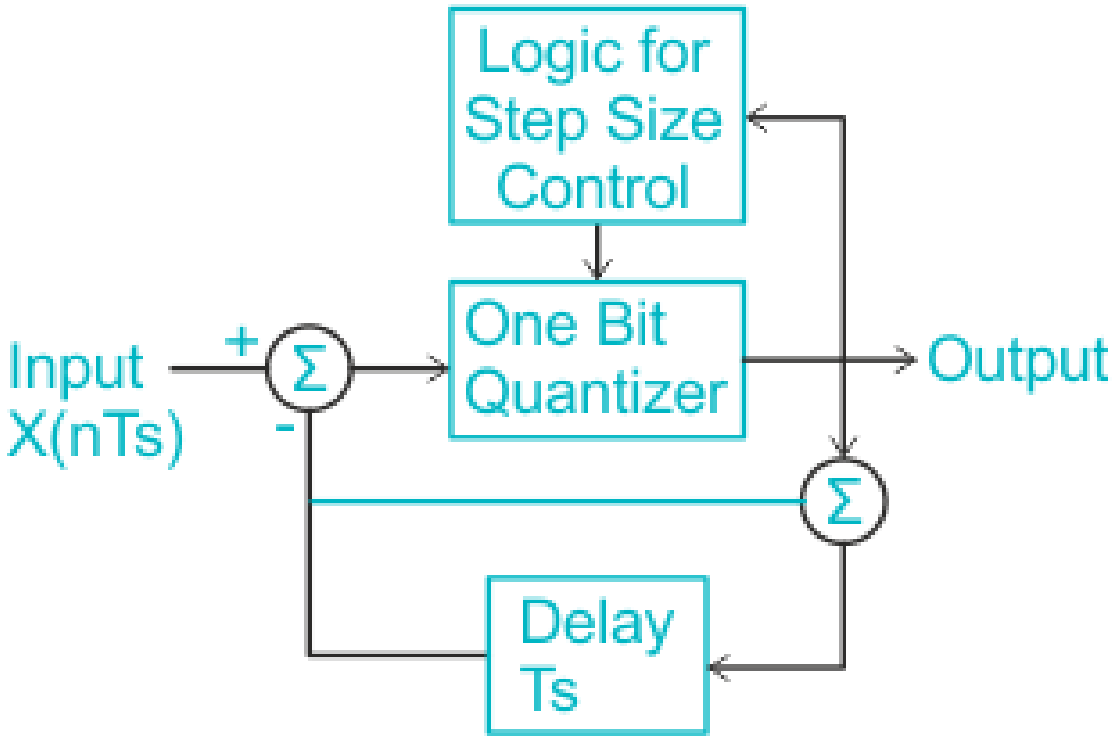


## Transmitter

- The logic for step size control is added in the diagram.
- The step size increases or decreases according to a specified rule depending on one bit quantizer output.
- For an example, if one bit quantizer output is high (i.e., 1), then step size may be doubled for next sample.
- If one bit quantizer output is low, then step size may be reduced by one step.

# Illustration of ADM

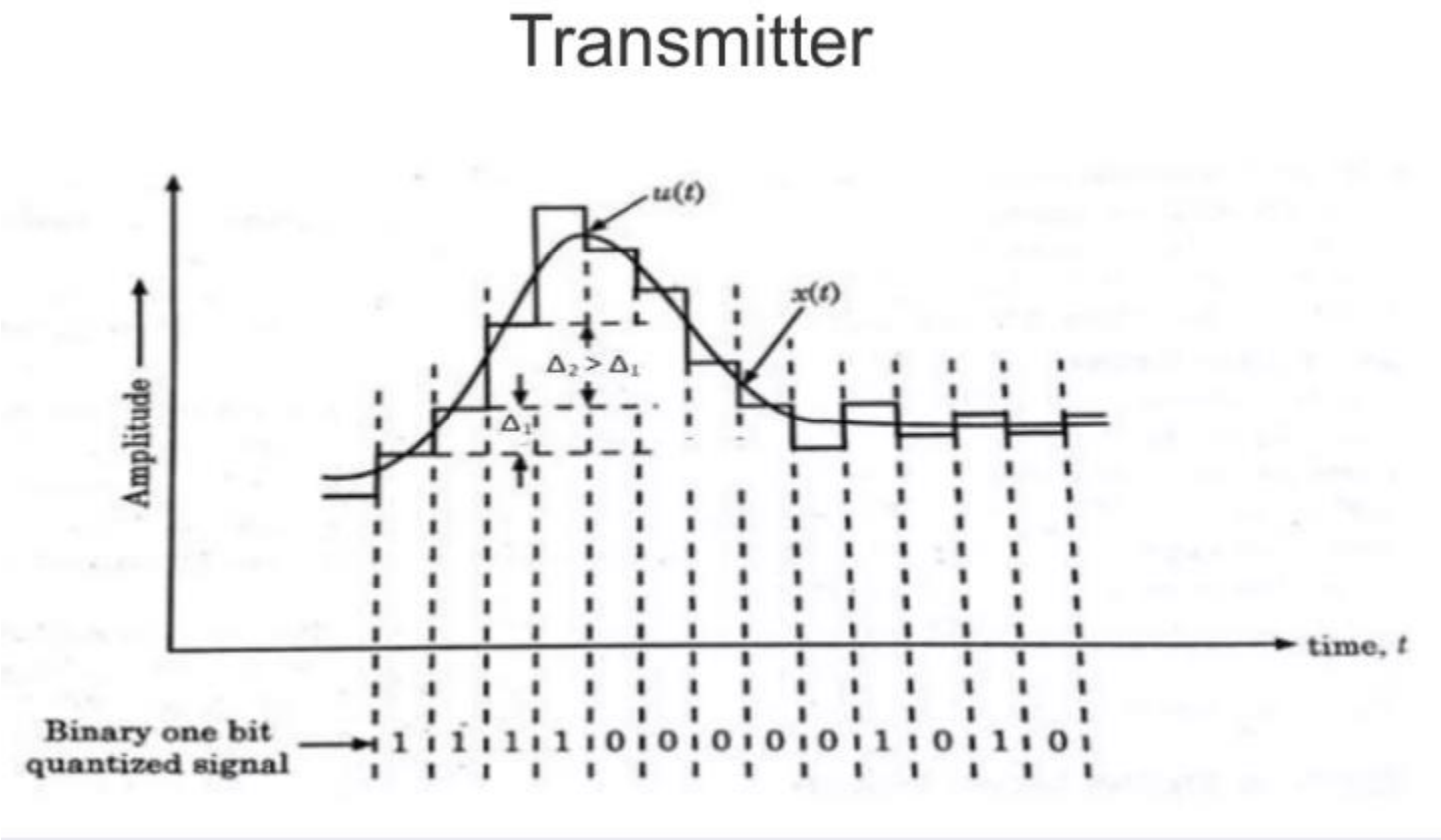

# ADM Receiver

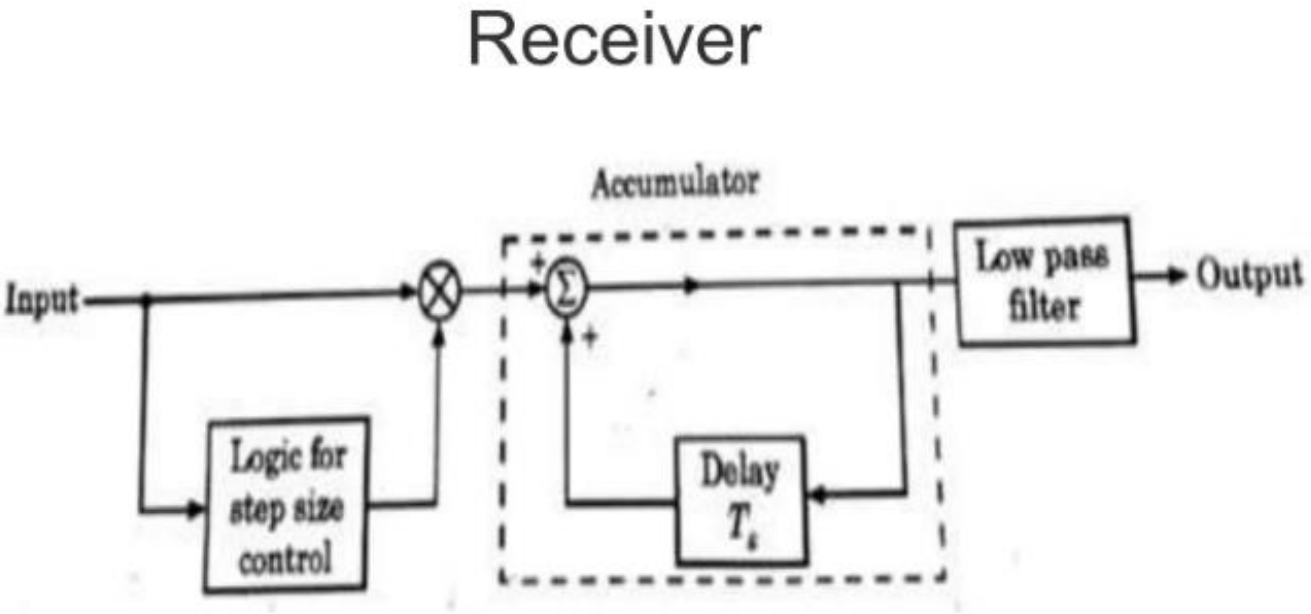


- The receiver has two portions. The first portion produces the step size from each incoming bit. Exactly the same process is followed as that in transmitter.
- The previous input and present input decide the step size.
- It is then applied to the second portion i.e., an accumulator which builds up staircase waveform.
- The low pass filter then smoothens out the staircase waveform to reconstruct the original signal.

# Advantages of Adaptive Delta Modulation

- Adaptive delta modulation has certain advantages over delta modulation as under :

1. The signal to noise ratio of ADM is better than that of DM because of the reduction in slope overload distortion and idle noise.
2. Because of the variable step size , the dynamic range of ADM is wider than DM.
3. Utilization of bandwidth is better in ADM than DM.